CONTRACT AGREEMENT

BETWEEN

GUHATI METROPOLITAN DEVELOPMENT AUTHORITY

AND

GAMMON INDIA LIMITED

GAMMON HOUSE, VEER SAVARKAR MARG, PRABHADEVI, MUMBAI – 400025.

FOR

Design & Construction of a Complete new 107 MLD Capacity Potable Water Supply Infrastructure Project on Turnkey Basis for Guwahati City (South Guwahati Part).

AT

Guwahati.

DRAWINGS

JOB NO: 8728 **WSS NO: 1295**

GAMMON INDIA LIMITED ★ MUMBAI ★

GAMMON INDIA LIMITED				
MASTER DOCUMENT INDEX FOR GUWAHATI PROJECT				
S.No.	Drawing No.	Rev No.	Title of Drawing	Remark
1	TD/16	0	WTP LAYOUT PLAN	
2	TD/17	0	TYPICAL WATER TREATMENT PLANT	
3	TD/18-1	0	WATER INTACKE THROUGH JACK WELL ARRANGEMENT	
4	TD/18-2	0	WATER INTACKE THROUGH JACK WELL ARRANGEMENT	
5	TD/18-3	0	WATER INTACKE THROUGH JACK WELL ARRANGEMENT	
6	TD/26	0	TYPICAL BOUNDARY WALL	
7	24320/TD/WS/SGW/10	0	LOCATION MAP SHOWING INTAKE STATION, WTP & SERVICE RESERVOIRES	
8	24320/TD/WS/SGW/19-1	0	CLEAR WATER PUMP HOUSE WITH SUMP (TYPE -1)	
9	24320/TD/WS/SGW/19-2	0	CLEAR WATER PUMP HOUSE WITH SUMP (SECTION)	
10	24320/TD/WS/SGW/20-2	0	ADMINISTRATIVE BUILDING AT WTP SITE (SECOND FLOOR PLAN)	
11	24320/TD/WS/SGW/20-3	0	ADMINISTRATIVE BUILDING AT WTP SITE (DIMENSIONAL DETAILS)	
12	24320/TD/WS/SGW/21	0	CHEMICAL HOUSE (GROUND FLOOR AND FIRST FLOOR PLAN)	
13	24320/TD/WS/SGW/22	0	CHLORINE HOUSE	
14	24320/TD/WS/SGW/23	0	GUARD ROOM	
15	24320/TD/WS/SGW/24	0	SLUDGE DISPOSAL UNIT	
16	24320/TD/WS/SGW/27	0	HILL TOP RESERVOIR	
17	24320/TD/WS/WEST KAMAKHYA/11-1	0	DISTRIBUTION NETWORK MAP OF WEST KAMAKHYA	
18	24320/TD/WS/WEST KAMAKHYA/11-2	0	DISTRIBUTION NETWORK MAP OF WEST KAMAKHYA	
19	24320/TD/WS/SGW/JALUKBARI/12-1	0	DISTRIBUTION NETWORK MAP OF JALUKBARI	
20	24320/TD/WS/SGW/JALUKBARI/12-2	0	DISTRIBUTION NETWORK MAP OF JALUKBARI	
21	24320/TD/WS/SGW/JALUKBARI/12-3	0	DISTRIBUTION NETWORK MAP OF JALUKBARI	
22	24320/TD/WS/SGW/GANESHPARA/13	0	DISTRIBUTION NETWORK MAP OF GANESHPARA	
23	24320/TD/WS/BORJHAR/15	0	DISTRIBUTION NETWORK MAP OF BORJHAR	
24	24320/TD/WS/SURVEY/1	0	SURVEY OF INTAKE POINT AT PANDU GHAT	
25	24320/TD/WS/SURVEY/2	0	SURVEY OF WTP SITE AT SADILAPUR	
26	24320/TD/WS/SURVEY/3	0	HILL TOP SURVEY FOR STORAGE RESERVOIR AT KAMAKHYA	
27	24320/TD/WS/SURVEY/4	0	HILL TOP SURVEY FOR STORAGE RESERVOIR AT JALUKBARI	
28	24320/TD/WS/SURVEY/5	0	HILL TOP SURVEY FOR STORAGE RESERVOIR AT GANESHPARA	
29	24320/TD/WS/SURVEY/6	0	HILL TOP SURVEY FOR STORAGE RESERVOIR AT MADHAB DEV NAGAR	
30	24320/TD/WS/SURVEY/7	0	HILL TOP SURVEY FOR STORAGE RESERVOIR AT DURGA SAROBAR	
31	24320/TD/WS/SURVEY/8	0	HILL TOP SURVEY FOR STORAGE RESERVOIR AT DURGA MIRZAPUR	
32	24320/TD/WS/SURVEY/9	0	HILL TOP SURVEY FOR STORAGE RESERVOIR AT BORJHAR / JOGIPARA	

GAMMON INDIA LIMITED ★ MUMBAI ★

Chief Executive Officer
Guwahati Metropolitan Dev Authority

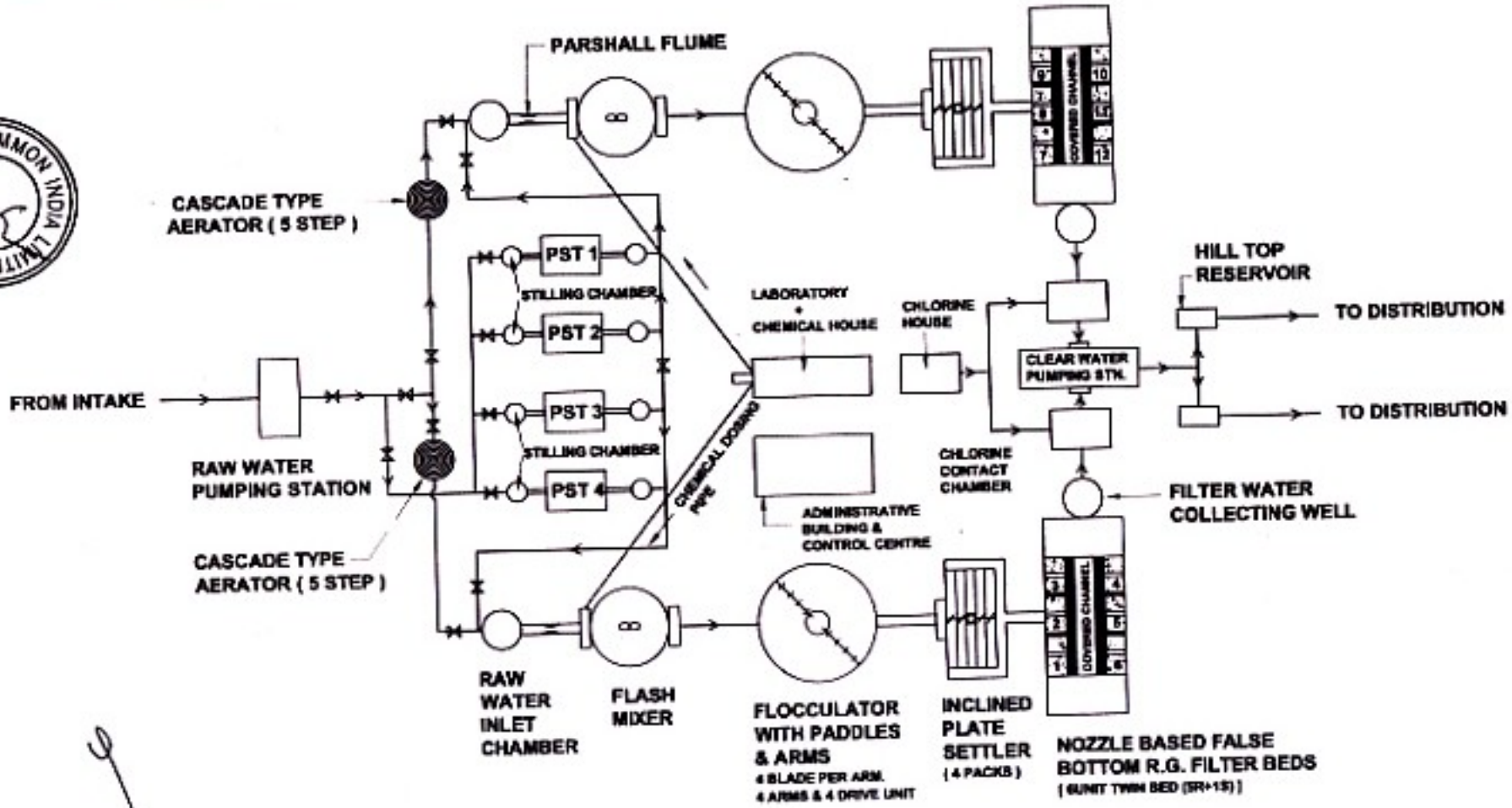

TYPICAL LAYOUT PLAN OF WATER TREATMENT PLANT UNITS

GOVERNMENT OF ASSAM (INDIA)
GUWAHATI METROPOLITAN DEVELOPMENT AUTHORITY

WATER SUPPLY, STORM WATER DRAINAGE, UNDERGROUND SEWERAGE AND ROAD RESTORATION OF GUWAHATI METROPOLITAN DEVELOPMENT AREA UNDER JNNURM SCHEME

WTP Layout Plan

Drg. No. TD16 | SCALE : Not to Scale

PROJECT MANAGEMENT CONSULTANT
TAHAL CONSULTING ENGINEERS LTD.

TYPICAL WATER TREATMENT PLANT

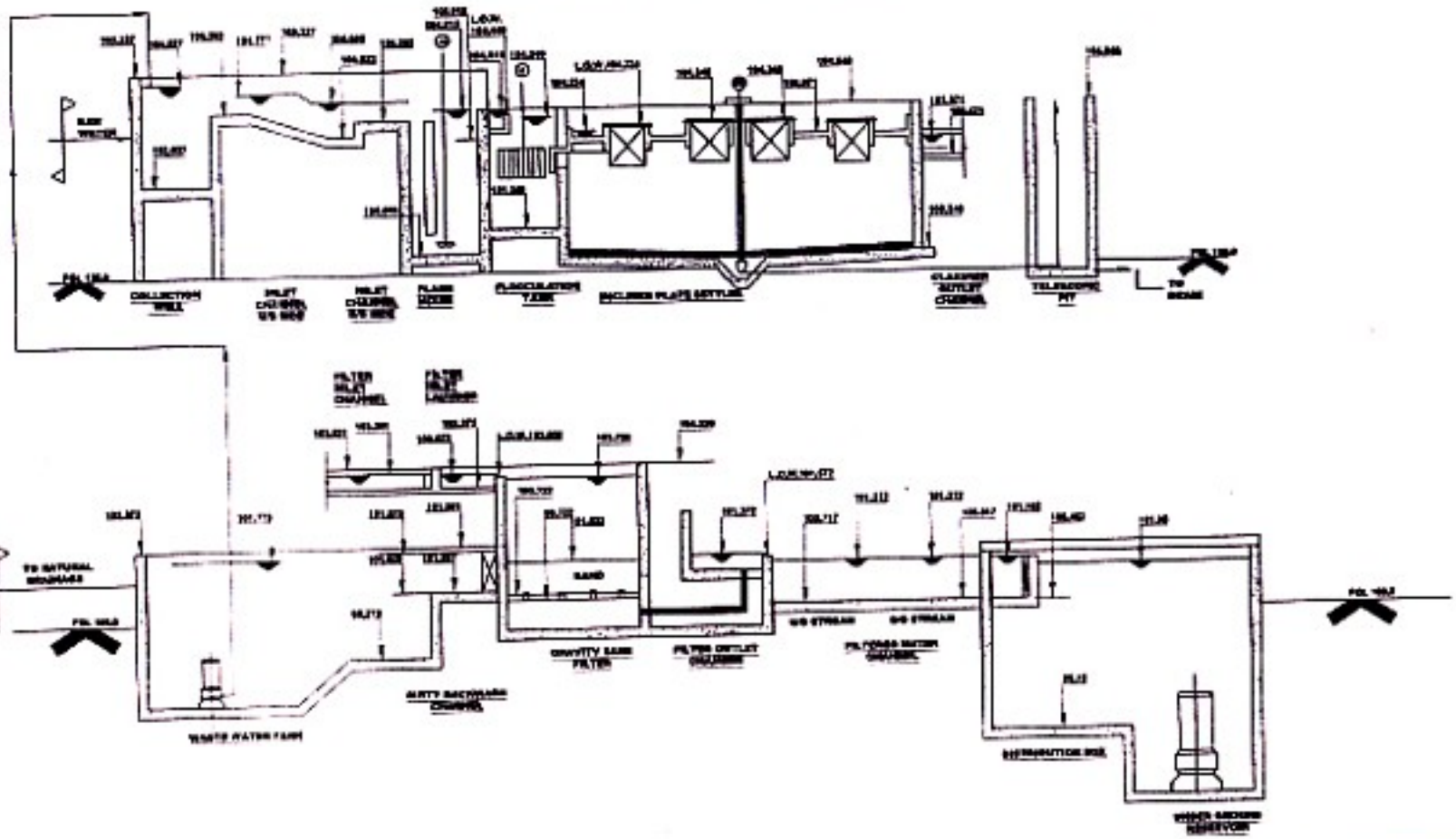

GAMMON INDIA LIMITED MUMBAI

Chief Executive Officer
Guwahati Metropolitan Dev Authority

NOTE :

1. ALL LEVELS ARE IN m
2. FOL MARKED 100.00m
3. L.O.W. - LIP OF WEIR
4. DATUM HAS BEEN FIXED ARBITRARY CHOOSEN. AS 100 m

GOVERNMENT OF ASSAM (INDIA)
GUWAHATI METROPOLITAN DEVELOPMENT AUTHORITY

WATER SUPPLY, STORM WATER DRAINAGE, UNDERGROUND SEWERAGE AND ROAD RESTORATION OF GUWAHATI METROPOLITAN DEVELOPMENT AREA UNDER JNNURM SCHEME

TYPICAL WATER TREATMENT PLANT

Map No. TD/17 | SCALE : NOT TO SCALE

PROJECT MANAGEMENT CONSULTANT :

TAHAL CONSULTING ENGINEERS LTD.

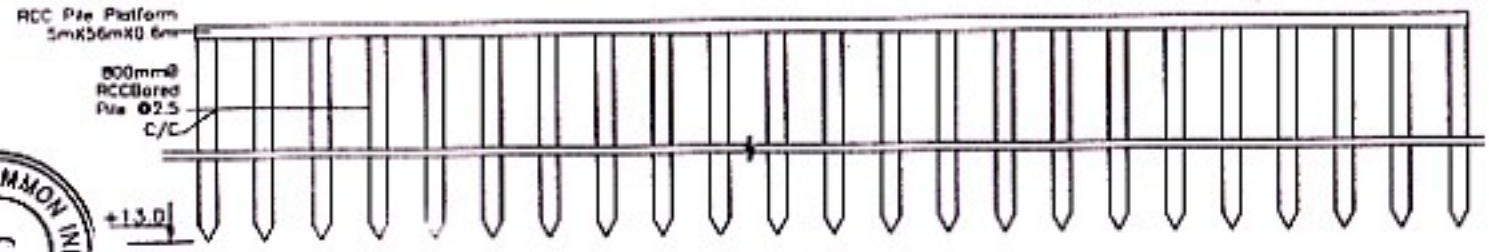

ELEVATION

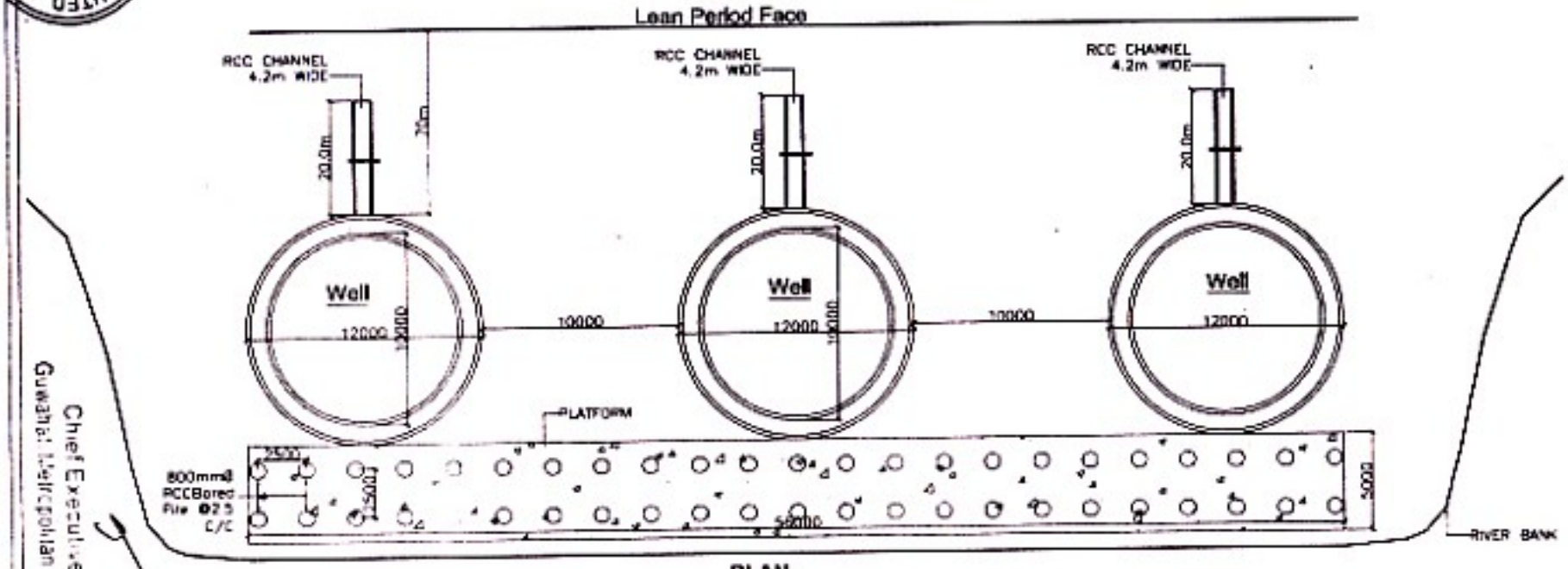

PLAN

Water Intake Through Jack Well Arrangement

NOTE: Screening arrangement and Sluice gates are to be provided as per requirement of sluices in each well.

GAMMON INDIA LIMITED MUMBAI

Chief Executive Officer
Guwahati Metropolitan Dev Authority

GOVERNMENT OF ASSAM (INDIA)
GUWAHATI METROPOLITAN DEVELOPMENT AUTHORITY

WATER SUPPLY, STORM WATER DRAINAGE, UNDERGROUND SEWERAGE AND ROAD RESTORATION OF GUWAHATI METROPOLITAN DEVELOPMENT AREA UNDER JNNURM SCHEME

Water Intake Through Jack Well Arrangement

Drg. No. TD/18-1 SCALE : Not to Scale

PROJECT MANAGEMENT CONSULTANT:
TAHAL CONSULTING ENGINEERS LTD.

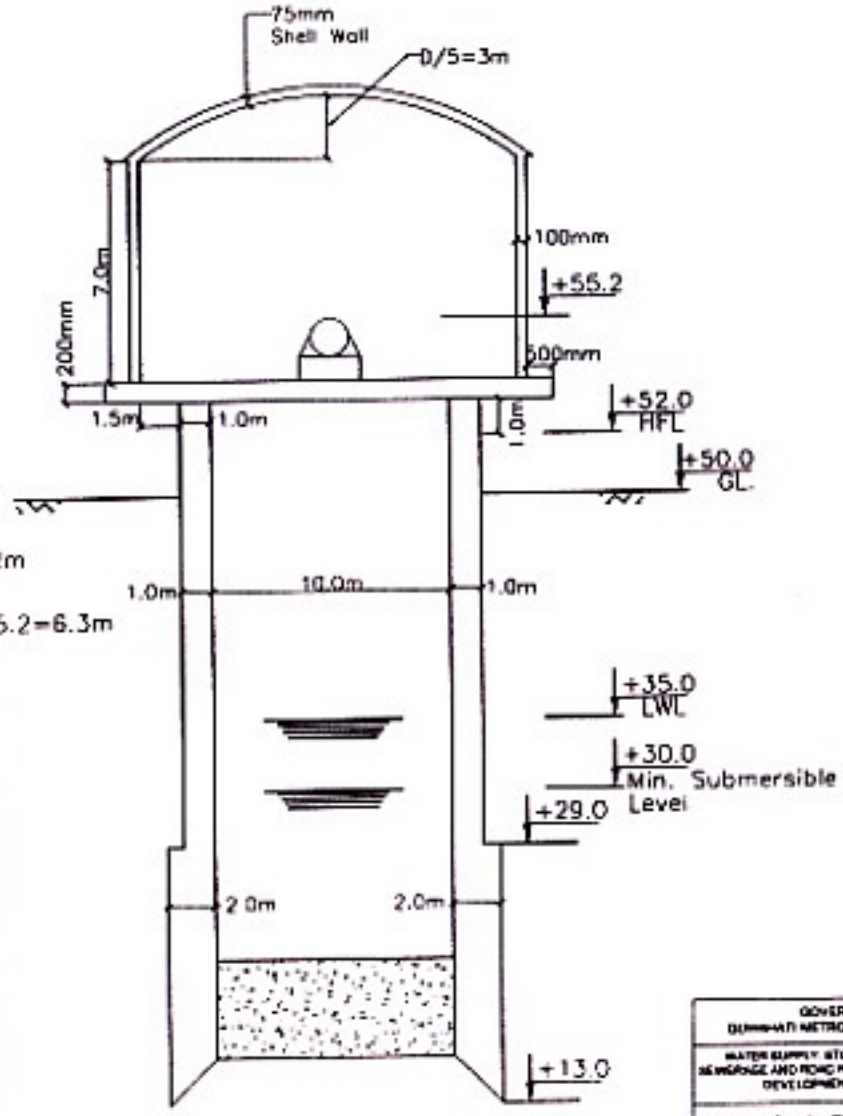

Suction Lift= 55.2−30=25.2m
Pumping Height = 61.5m
Delivery Height = 61.5m−55.2=6.3m

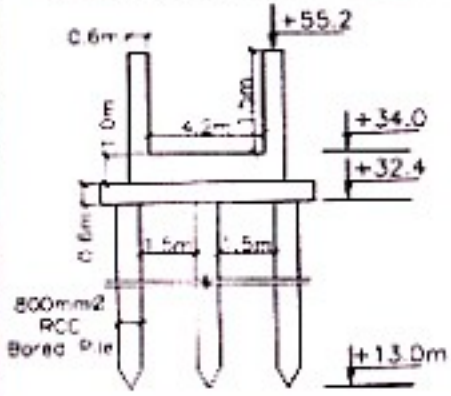

Typical Detail of RCC Channel

Typical Detail of Jack Well

GOVERNMENT OF ASSAM (INDIA)
GUWAHATI METROPOLITAN DEVELOPMENT AUTHORITY

WATER SUPPLY, STORM WATER DRAINAGE, UNDERGROUND SEWERAGE AND ROAD RESTORATION OF GUWAHATI METROPOLITAN DEVELOPMENT AREA UNDER JNNURM SCHEME

Water Intake Through Jack Well Arrangement

Drg. No. 10/16-2 | SCALE : Not to Scale

PROJECT MANAGEMENT CONSULTANT :
TAHAL CONSULTING ENGINEERS LTD.

GAMMON INDIA LIMITED MUMBAI

Chief Executive Officer
Guwahati Metropolitan Dev Authority

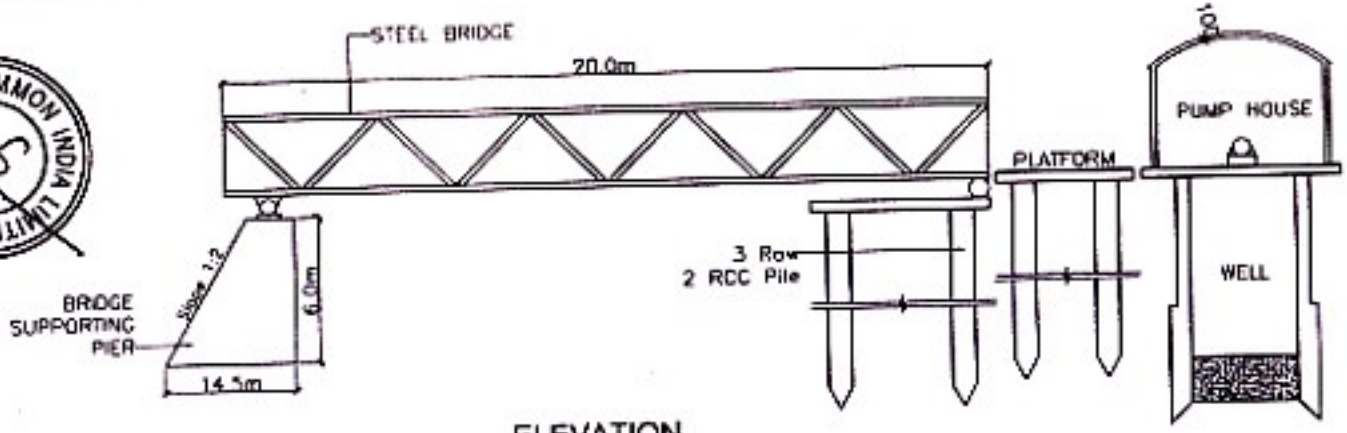

ELEVATION

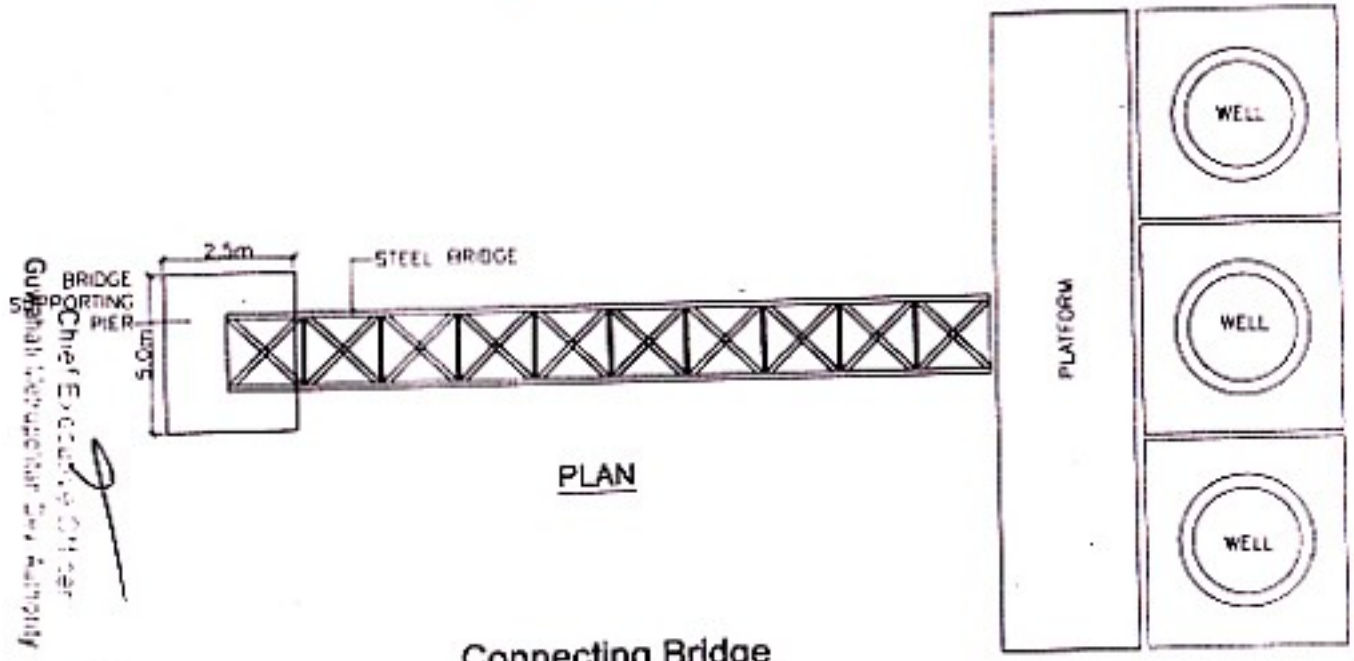

PLAN

Connecting Bridge

GAMMON INDIA LIMITED MUMBAI

Chief Engineer
Guwahati Metropolitan Development Authority

GOVERNMENT OF ASSAM (INDIA)
GUWAHATI METROPOLITAN DEVELOPMENT AUTHORITY

WATER SUPPLY, STORM WATER DRAINAGE, UNDERGROUND SEWERAGE AND ROAD RESTORATION OF GUWAHATI METROPOLITAN DEVELOPMENT AREA UNDER JNNURM SCHEME

Water Intake Through Jack Well Arrangement

Drg. No. TGI1&3 | SCALE : Not to Scale

PROJECT MANAGEMENT CONSULTANT

TAHAL CONSULTING ENGINEERS LTD.

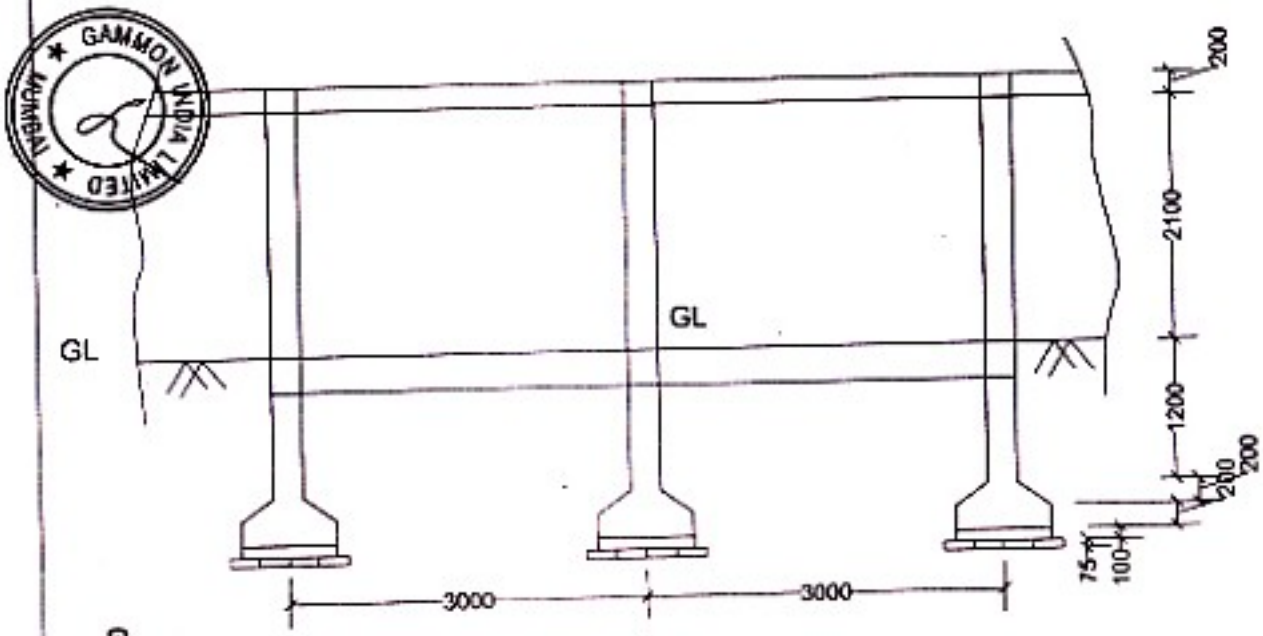

ELEVATION

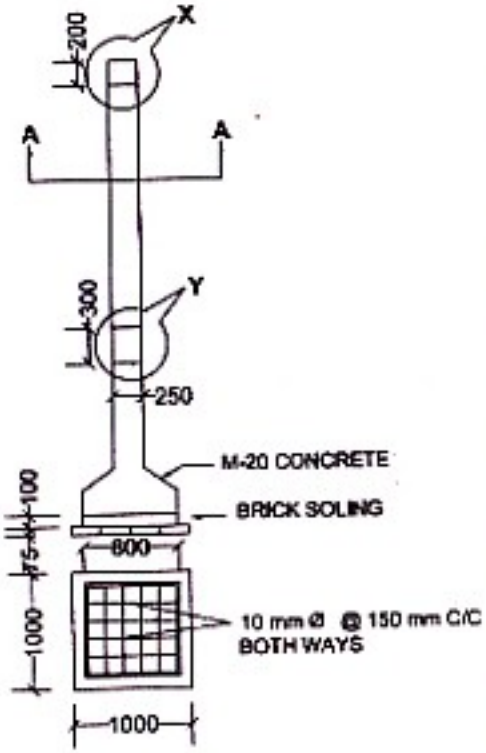

DETAILS OF COLUMN WITH FOUNDATION

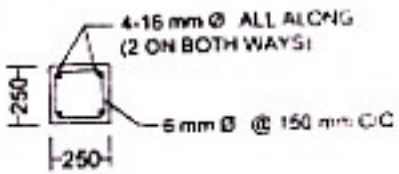

DETAILS AT A-A

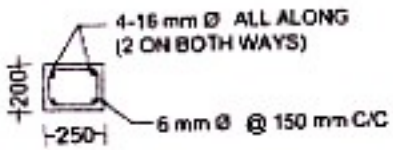

DETAIL OF 'X'

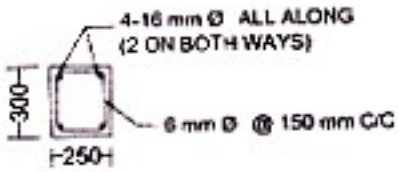

DETAIL OF 'Y'

TYPICAL BOUNDARY WALL

GAMMON INDIA LIMITED MUMBAI

Chief Executive Officer
Guwahati Metropolitan Dev Authority

Typical Boundary Wall

TANSEC

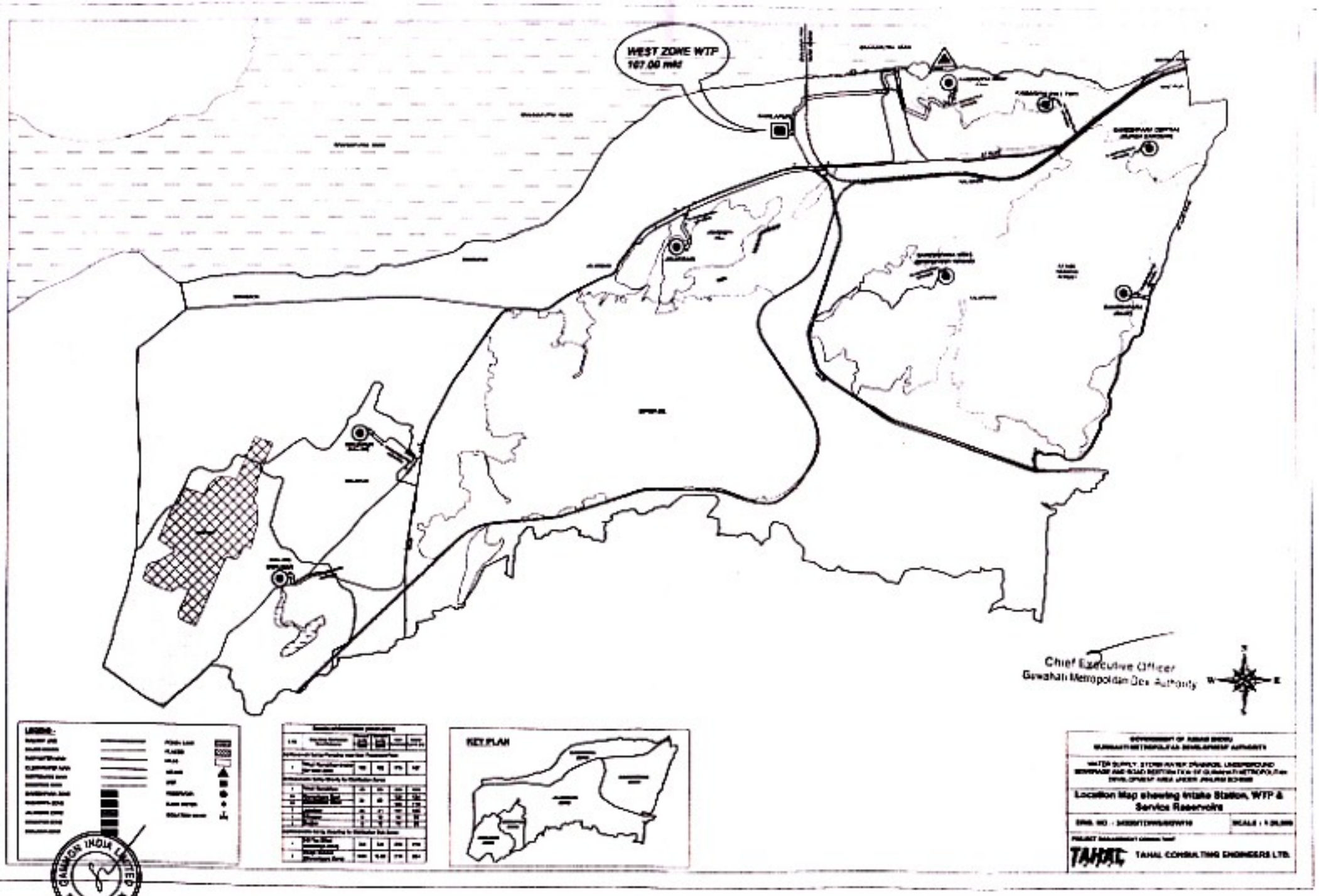
WEST ZONE WTP
167.00 mld
Chief Executive Officer
Guwahati Metropolitan Dev. Authority
KEY PLAN
Location Map showing Intake Station, WTP & Service Reservoirs
TAHAL CONSULTING ENGINEERS LTD.
GAMMON INDIA LIMITED
MUMBAI

	WTP				BOOSTING					
	1	2	3	4	5	6	7	8	9	10
RESERVOIR	m	m	m	m	m	m	m	m	m	m
CAPACITY	40x	50x	40x	20x	20x	20x	20x	20x	20x	20x
AND SIZE	25x	40x	30x	20x	20x	15x	10x	15x	20x	15x
LxBxD	5	5	5	5	3.5	3.5	3.5	3.5	3.5	3.5
SUMP SIZE	30x	30x	30x	20x	20x	20x	20x	20x	20x	20x
	5.5x	5.5x	5.5x	5.5x	5.5x	5.5x	5.5x	5.5x	5.5x	5.5x
	6.4	6.4	6.4	6.4	6.4	6.4	6.4	6.4	6.4	6.4
PUMP	30x	30x	30x	20x	20x	20x	20x	20x	20x	20x
HOUSE SIZE	12.15x	12.15x	12.15x	12.15x	12.15x	12.15x	12.15x	12.15x	12.15x	12.15x
	9.975	9.975	9.975	9.975	9.975	9.975	9.975	9.975	9.975	9.975

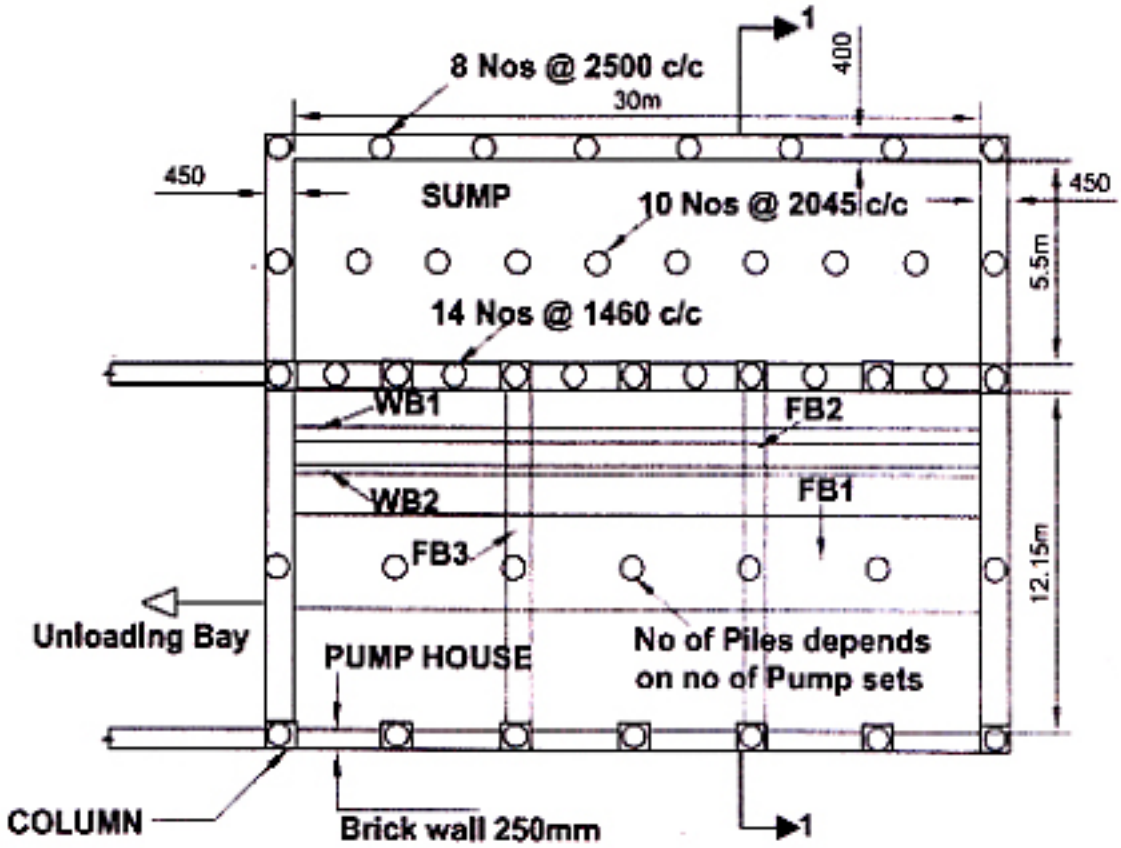

PUMP HOUSE WITH SUMPS
FOR WTP PUMPING & BOOSTER PUMPING

TYPE - 1: SUMP- 30m x 5.5m x 6.4m
PUMP HOUSE- 30m x 12.15m x 9.975m

GOVERNMENT OF ASSAM (INDIA)
GUWAHATI METROPOLITAN DEVELOPMENT AUTHORITY

WATER SUPPLY + STORM WATER DRAINAGE UNDERGROUND SEWERAGE AND ROAD RESTORATION OF GUWAHATI METROPOLITAN DEVELOPMENT AREA UNDER JNNURM SCHEME

Clear Water Pump House With Sump
(Type - 1)

DRG. NO. - 24320/TD/WS/SC/W119-1 | SCALE : NTS

PROJECT MANAGEMENT CONSULTANT
TAHAL CONSULTING ENGINEERS LTD.

Chief Executive Officer
Guwahati Metropolitan Dev Authority

GAMMON INDIA LIMITED MUMBAI

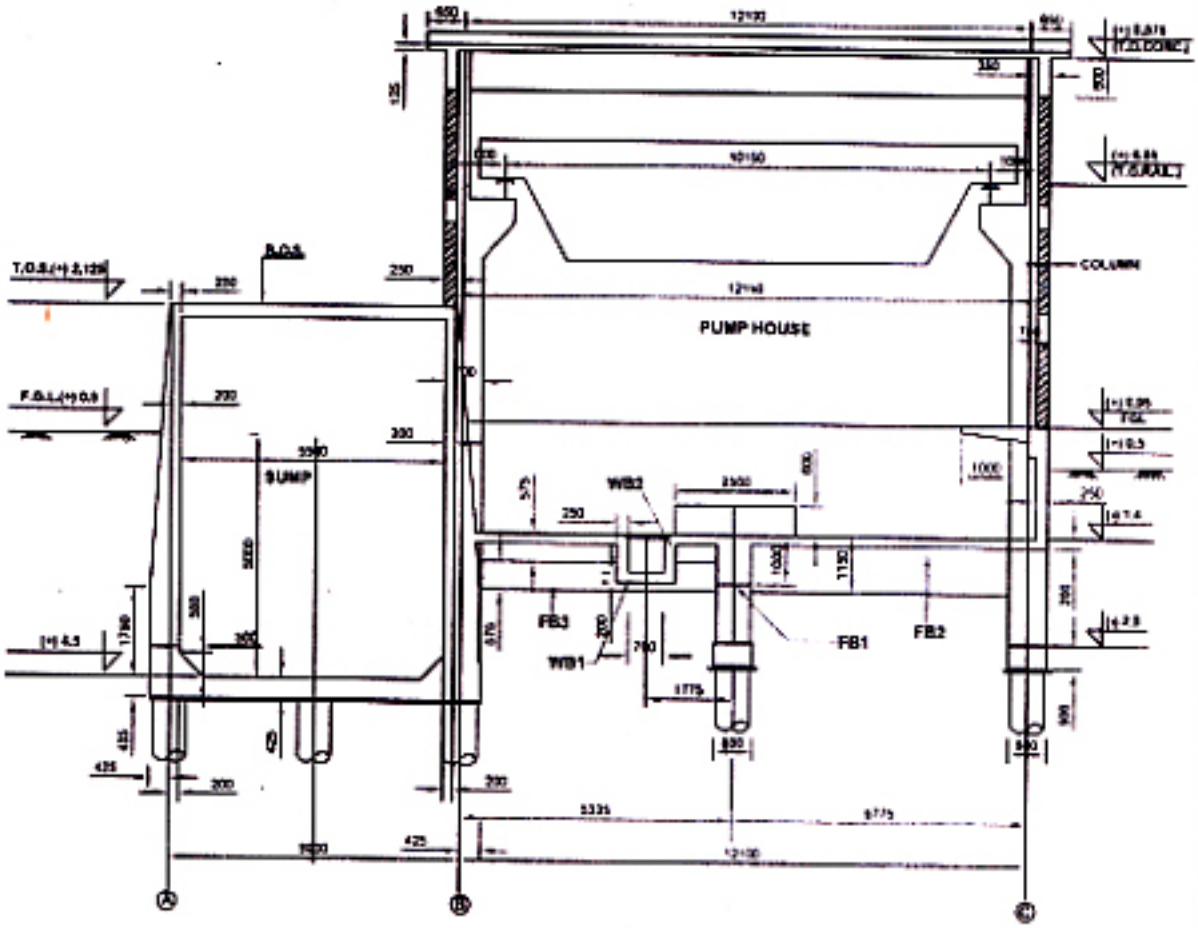

SECTION 1-1

GOVERNMENT OF ASSAM (INDIA)
GUWAHATI METROPOLITAN DEVELOPMENT AUTHORITY

WATER SUPPLY, STORM WATER DRAINAGE, UNDERGROUND SEWERAGE AND ROAD RESTORATION OF GUWAHATI METROPOLITAN DEVELOPMENT AREA UNDER JNNURM SCHEME

Clear Water Pump House With Sump (Section)

DRG. NO. - 243201TD/WS/SQW-192 | SCALE : NTS

PROJECT MANAGEMENT CONSULTANT

TAHAL CONSULTING ENGINEERS LTD.

Chief Executive Officer
Guwahati Metropolitan Dev Authority

GAMMON INDIA LIMITED ★ MUMBAI ★

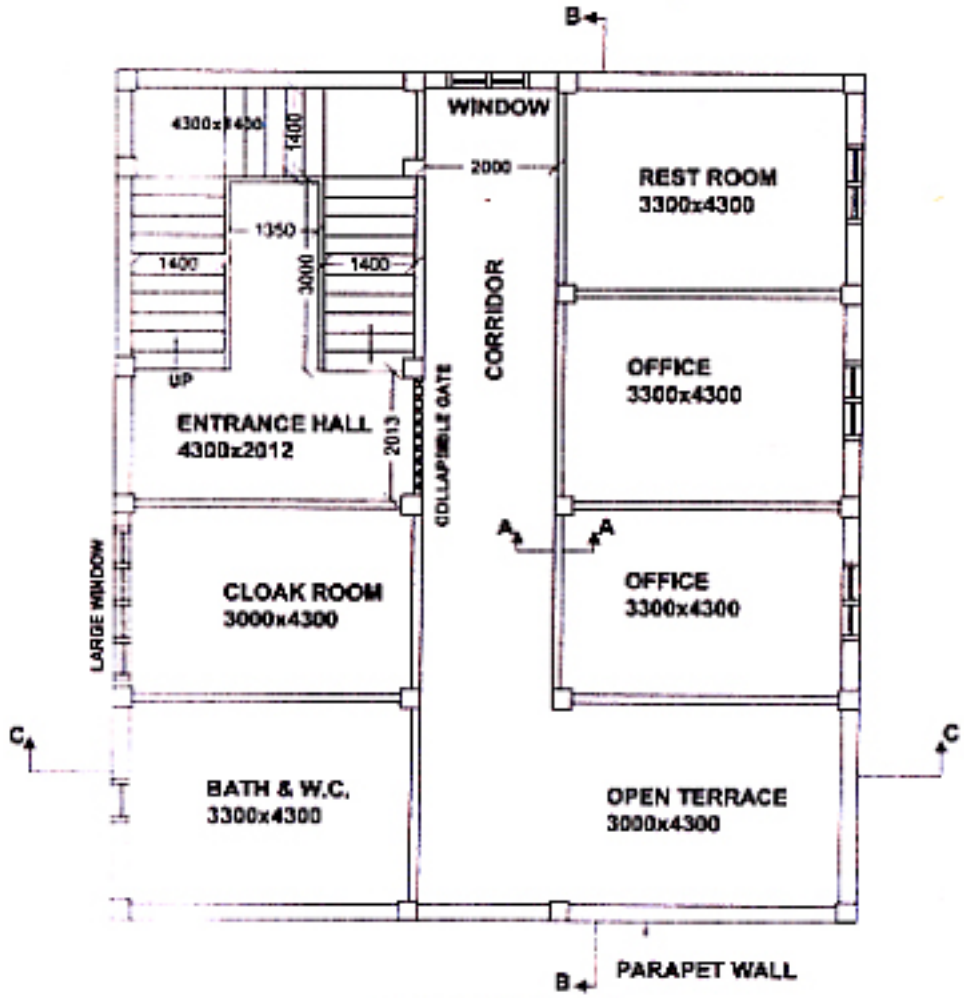

2nd FLOOR PLAN

GAMMON INDIA LIMITED MUMBAI

Chief Executive Officer
Guwahati Metropolitan Dev Authority

Administrative Building at WTP Site
(Second Floor Plan)

TAHAL CONSULTING ENGINEERS LTD.

PEDASTAL - 2000x2000 SQUARE
STIRRUPS - 8mm Ø @ 200 C/C TOR STEEL

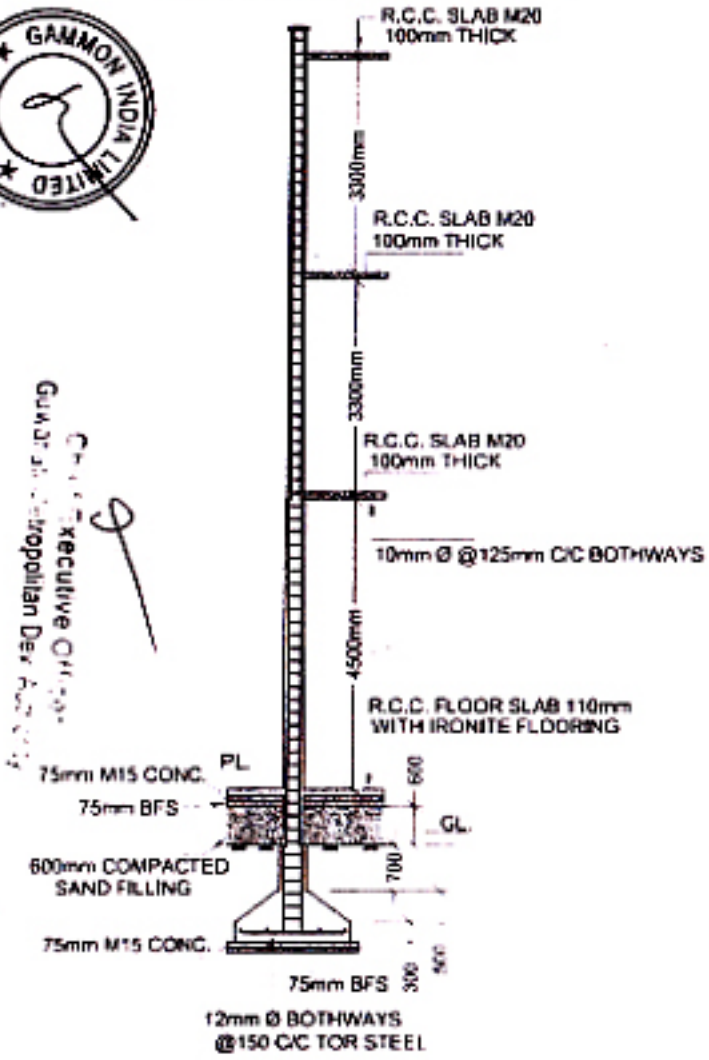

SECTION OF COLUMN & FOOTING

ALL BEAMS 400x250
MAIN
REINFORCEMENT
4 NOS, 16mm Ø
TOR STEEL

STIRRUP-
8 mm Ø @150 C/C
TOR STEEL

SEC - AA

BEAM SLAB
R.C.C. M 20

250x250
R.C.C. COL.
M20 4Nos. 16mm
Ø TOR STEEL

300x300
R.C.C. COL.
M20 4Nos. 16mm
Ø TOR STEEL

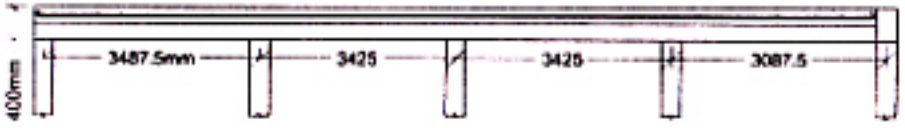

SEC - BB
(BEAM SLAB R.C.C. M 20)

10mm Ø @125 C/C

10mm Ø @ 125 C/C ALTERNATE CRANKED
UP. ADDITIONAL 10mm Ø OVER SUPPORT
2m LENGTH @ 125 C/C

SEC - CC SLAB
(100mm TH. R.C.C. M 20C)

GAMMON INDIA LIMITED MUMBAI

Executive Engineer
Metropolitan Development Authority

Administrative Building at WTP Site
(Dimensional Details)

DRG. NO. : [illegible] SCALE : [illegible]

TAHAL CONSULTING ENGINEERS LTD.

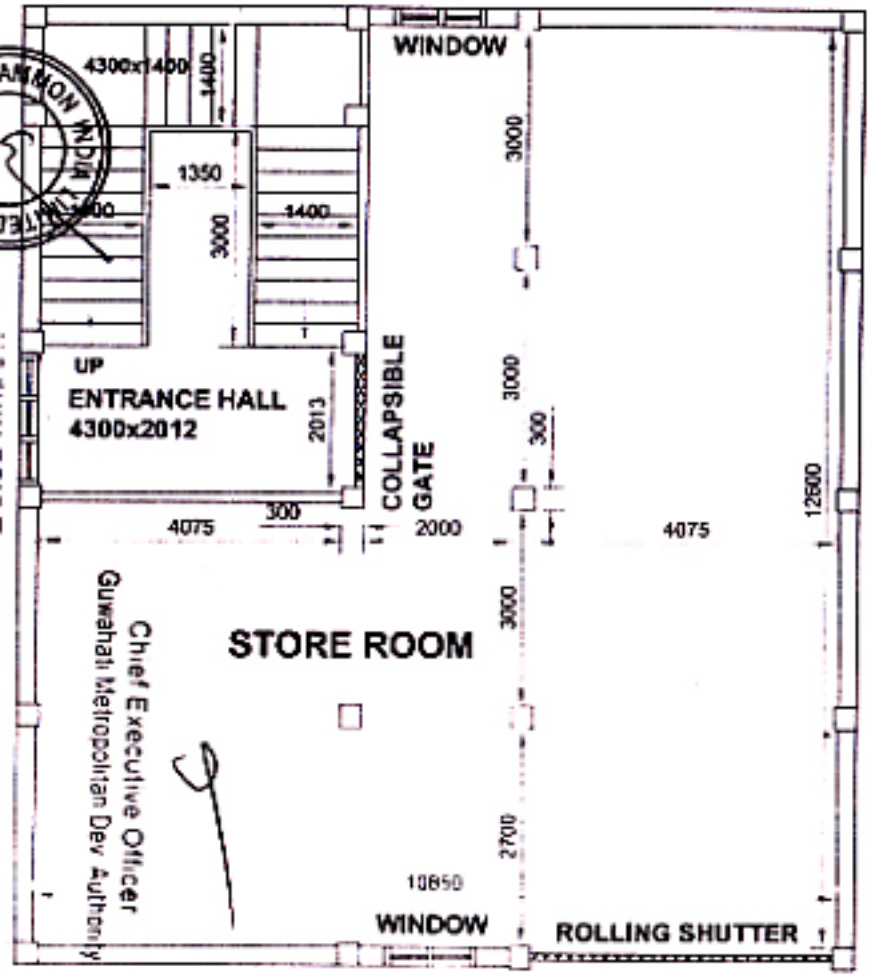

GROUND FLOOR PLAN

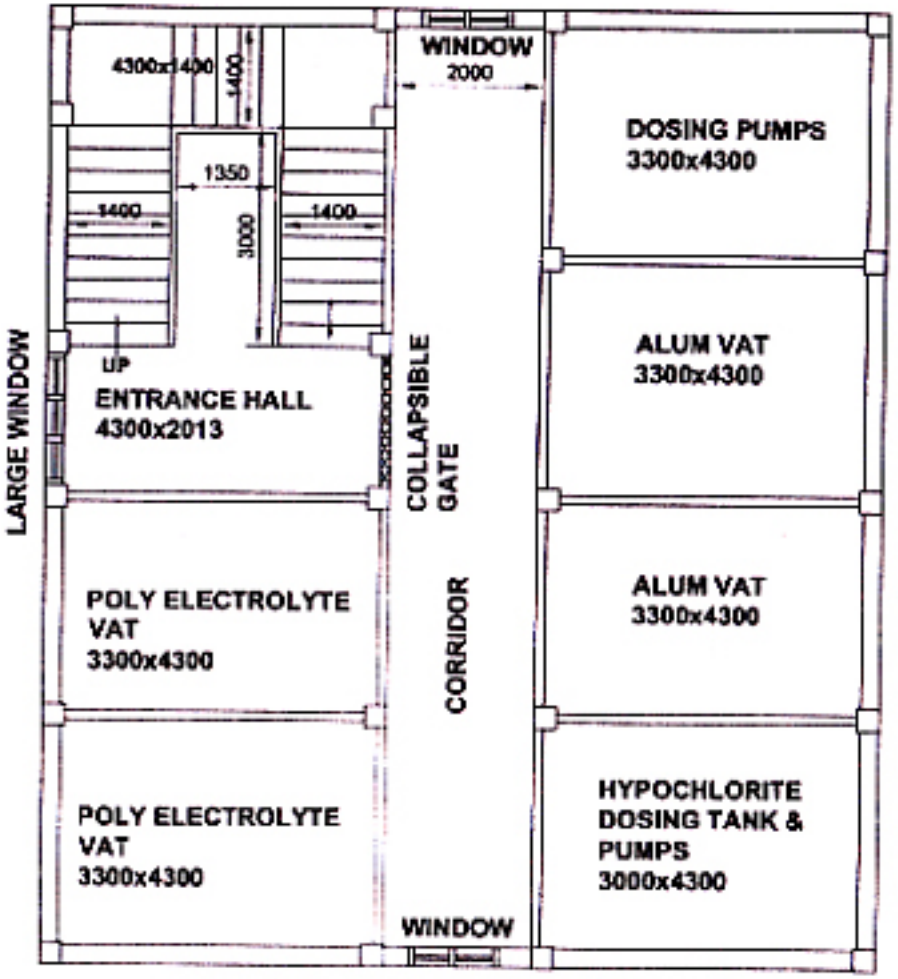

FIRST FLOOR PLAN

NOTES:

1. BEAM - COLUMN STRUCTURE WITH ISOLATED FOOTING
2. OUTSIDE WALL - BRICK WORK - 250mm
   INSIDE PARTITION WALL - 125mm
3. GROUND FLOOR ROOM HEIGHT - 5.5m
4. 1st FLOOR HEIGHT - 3300mm

Chemical House
(Ground Floor and First Floor Plan)

TAHAL CONSULTING ENGINEERS LTD.

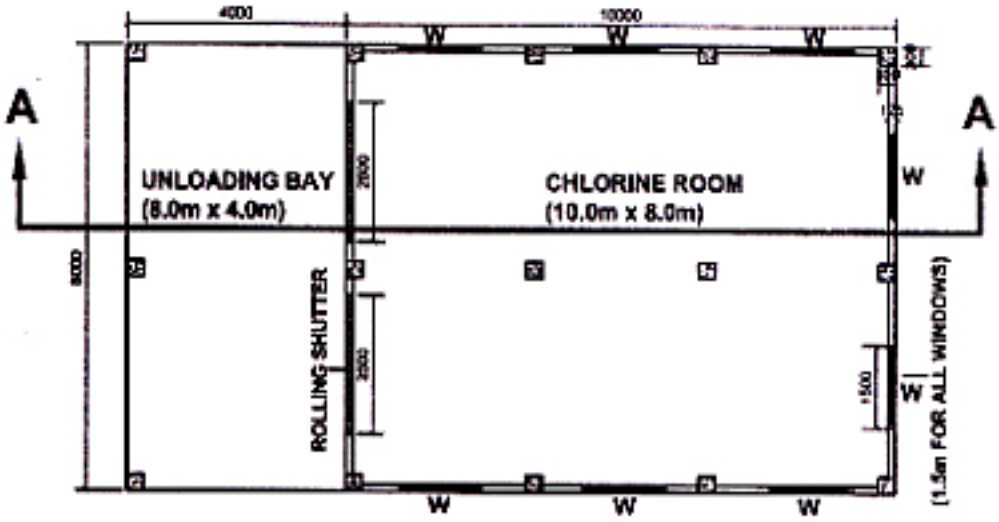

PLAN

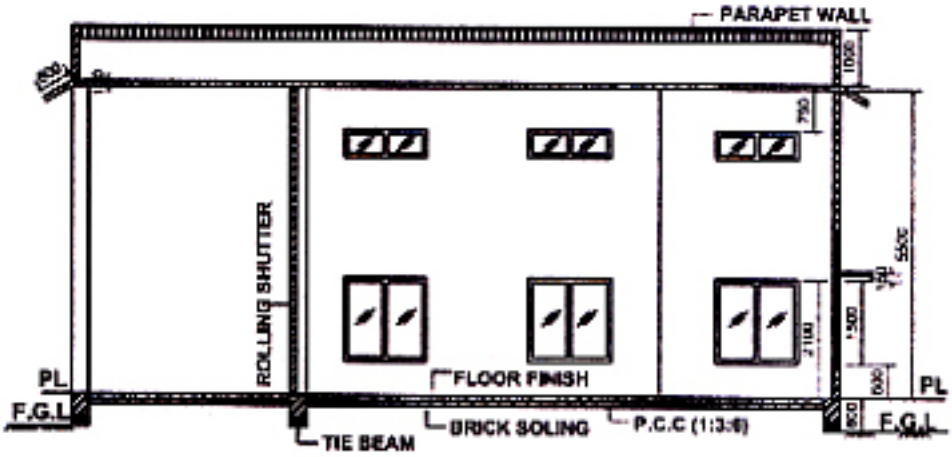

SECTION A-A

GOVERNMENT OF ASSAM (INDIA)
GUWAHATI METROPOLITAN DEVELOPMENT AUTHORITY

WATER SUPPLY, STORM WATER DRAINAGE, UNDERGROUND SEWERAGE AND ROAD RESTORATION OF GUWAHATI METROPOLITAN DEVELOPMENT AREA UNDER JNNURM SCHEME

Chlorine House

DRG. NO. - 24320/TD/WS/SGW/22	SCALE - NTS

PROJECT MANAGEMENT CONSULTANT
TAHAL CONSULTING ENGINEERS LTD.

Chief Executive Officer
Guwahati Metropolitan Dev. Authority

GAMMON INDIA LIMITED
MUMBAI

TYPICAL GUARD ROOM AT ALL INSTALLATIONS (30+4)

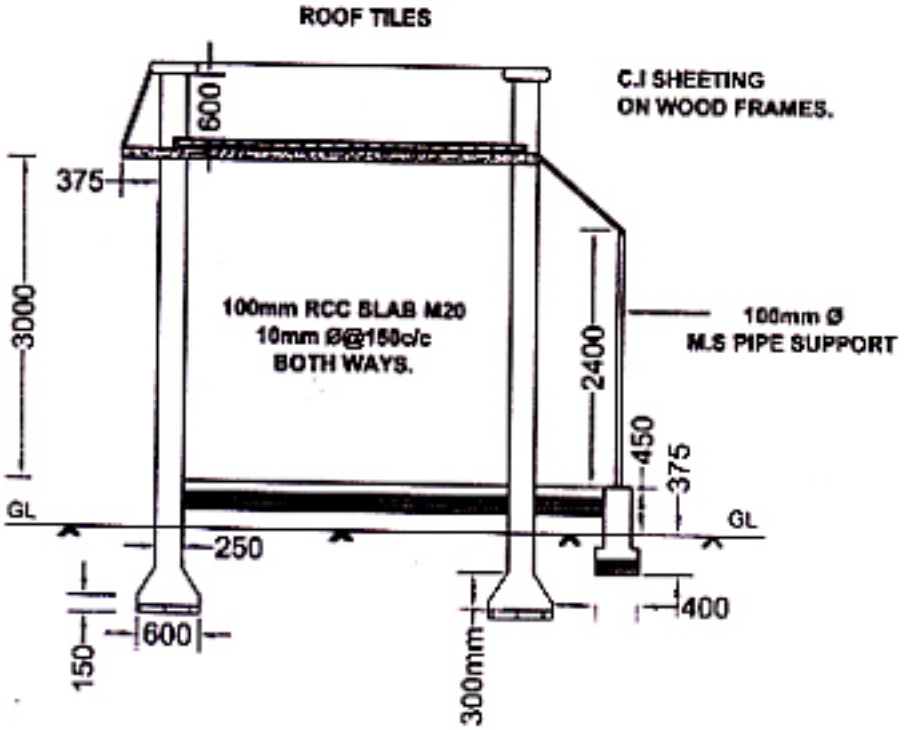

SECTION A-A

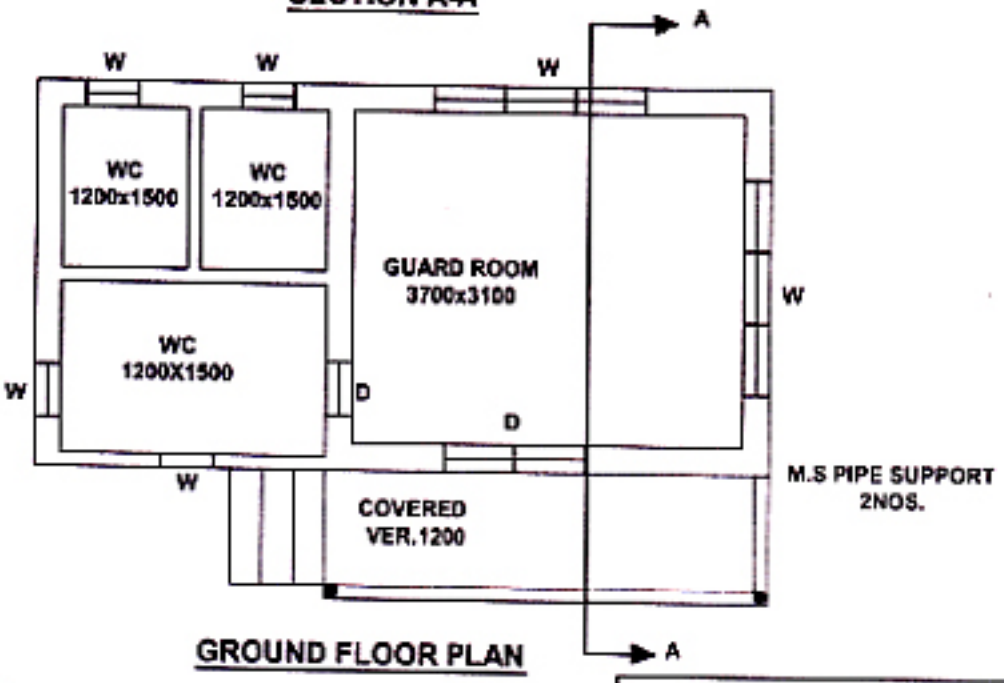

GROUND FLOOR PLAN

NOTES:-

1. OUTSIDE WALL B/W - 250mm (4:1)
   INSIDE WALL B/W - 125mm (4:1)
2. FLOOR-CEMENT CONCRETE 40mm (4:2:1)
   75mm CEMENT CONCRETE (6:3:1) 75mm BFS
3. FOOTING- ISOLATED FOOTING (1:2:4)
4. PLUMBING,LIGHTING,MISC ON PERCENTAGE BASIS.

GOVERNMENT OF ASSAM (INDIA)
GUWAHATI METROPOLITAN DEVELOPMENT AUTHORITY

WATER SUPPLY, STORM WATER DRAINAGE, UNDERGROUND SEWERAGE AND ROAD RESTORATION OF GUWAHATI METROPOLITAN DEVELOPMENT AREA UNDER JNNURM SCHEME

Guard Room

DRG. NO. - 34320/TD/WS/SDW/23 | SCALE NTS

PROJECT MANAGEMENT CONSULTANT
TAHAL CONSULTING ENGINEERS LTD.

Chief Executive Officer
Guwahati Metropolitan Dev. Authority

GAMMON INDIA LIMITED MUMBAI

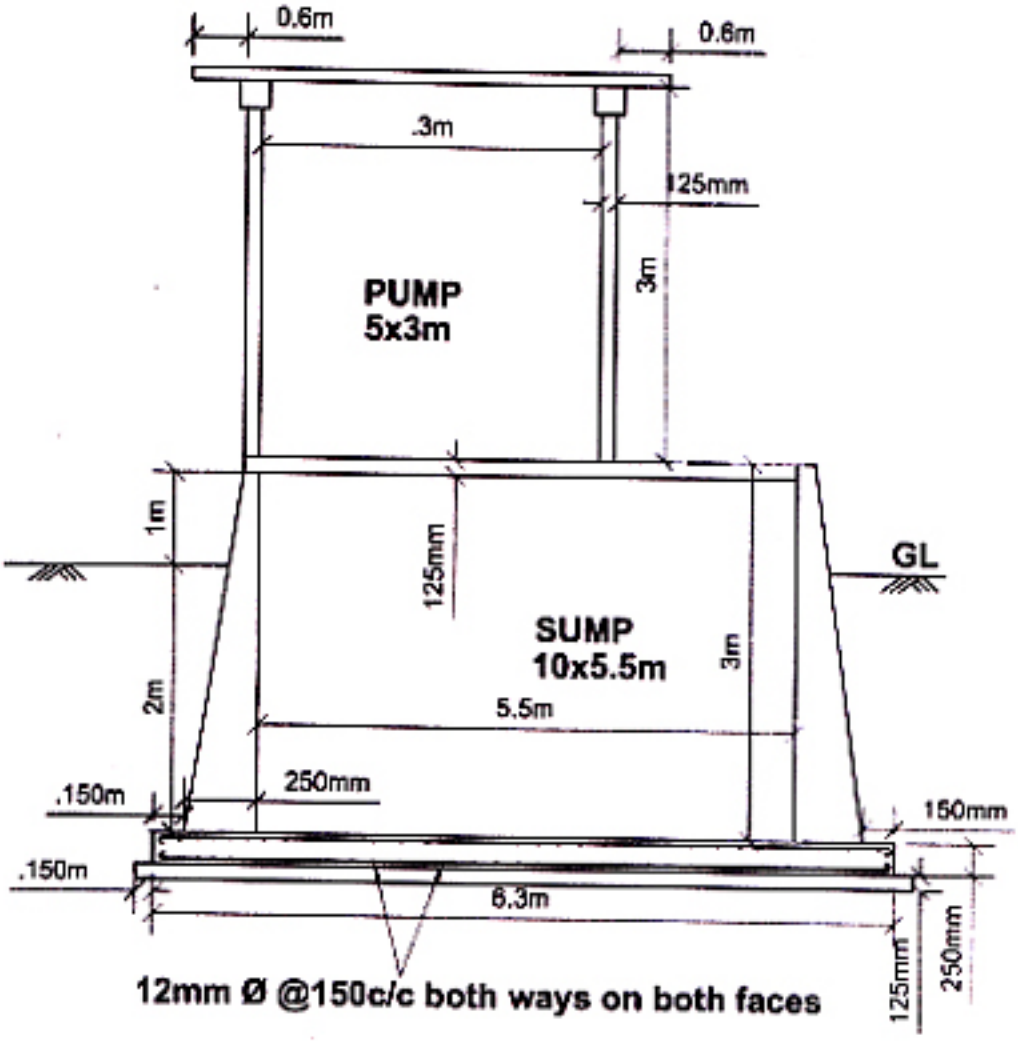

SLUDGE DISPOSAL UNIT

GOVERNMENT OF ASSAM (INDIA)
GUWAHATI METROPOLITAN DEVELOPMENT AUTHORITY

WATER SUPPLY, STORM WATER DRAINAGE, UNDERGROUND SEWERAGE AND ROAD RESTORATION OF GUWAHATI METROPOLITAN DEVELOPMENT AREA UNDER JNNURM SCHEME

Sludge Disposal Unit

DRG. NO. - 24328/TC/WS/SQW/24 | SCALE : NTS

PROJECT MANAGEMENT CONSULTANT
TAHAL CONSULTING ENGINEERS LTD.

Executive Officer
Metropolitan Dev. Auth.

GAMMON INDIA LIMITED MUMBAI

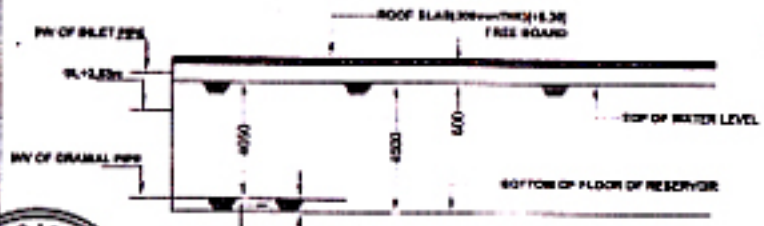

HILL-TOP RESERVOIR WITH RELATIVE LEVELS

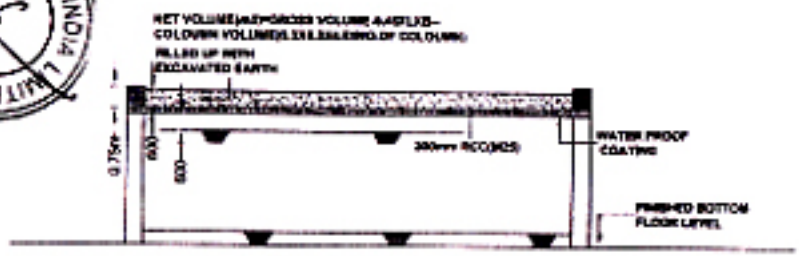

ELEVATION ABOVE BOTTOM FLOOR

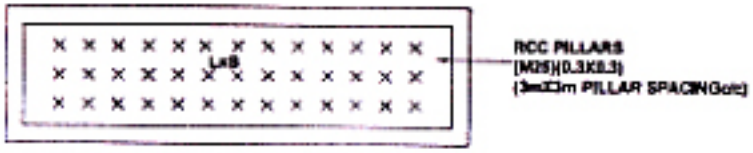

PLAN (SHOWING COLOUMN CENTRES)

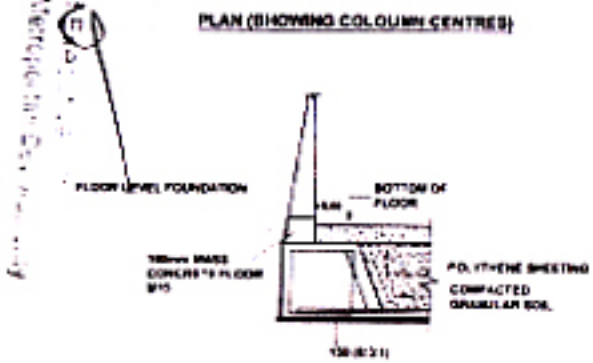

40mm STONE BALLAST CONCRETE

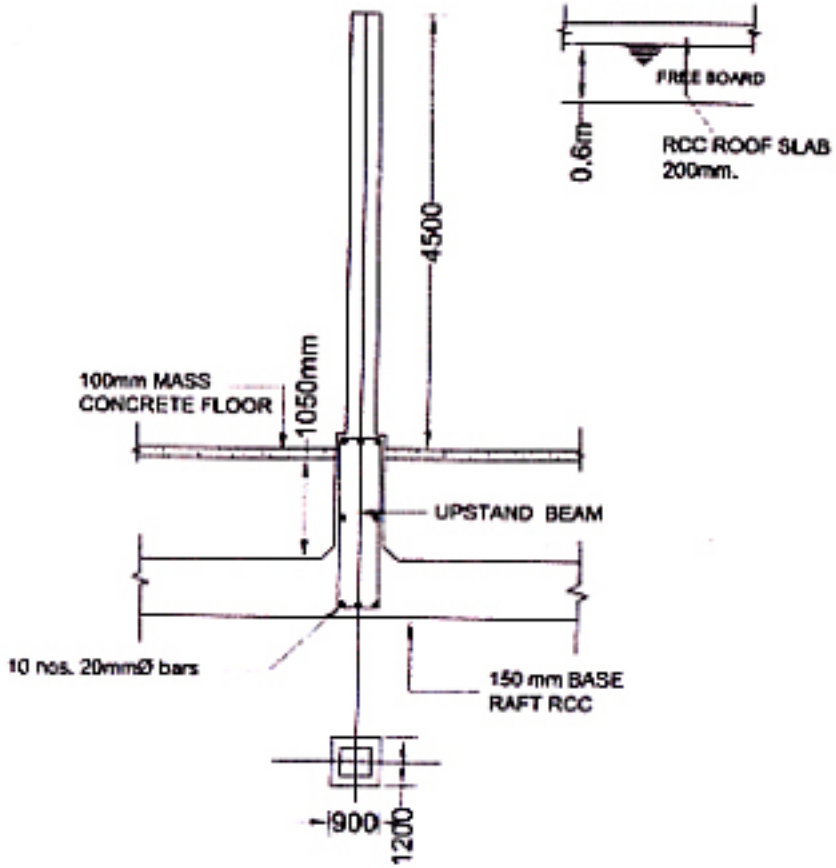

SECTION OF BASE OF COLUMN ON UPSTAND BEAM OF HILL TOP RESERVOIR

Hill-Top Reservoir

TAHAL CONSULTING ENGINEERS LTD.

GAMMON INDIA LIMITED MUMBAI

Chief Engineer
Guwahati Metropolitan Development Authority