Overview of the Harmonized Guidelines and Space Standards for Barrier Free Built Environment for Persons with Disability and Elderly Persons

STANDARDS OF ACCESSIBILITY FOR BUILT ENVIRONMENT

Prepared by
SHISHU SAROTHI

With the support of
SOCIAL WELFARE DEPARTMENT
GOVERNMENT OF ASSAM

Introduction

The Harmonised Guidelines and Space Standards for Barrier Free Built Environment for Persons with Disability and Elderly Persons, as issued by the Government of India, Ministry of Urban Development is a manual for design of barrier free built environment. These comprehensive guidelines have been duly notified under Section 40 of the Rights of Persons with Disabilities Act, 2016 as the standard for accessibility in built environment. Section 44 of the said Act mandates that no establishment shall be granted permission to build any structure if the building plan does not adhere to the Guidelines as notified by the Government and it also states that no establishment shall be issued a certificate of completion or allowed to take occupation of a building unless it has adhered to the required accessibility norms / Guidelines as aforementioned.

The Guidelines explicitly cover universal accessibility standards and responds to the varying needs of all users including elderly persons, those with reduced mobility and persons with disabilities. It may be noted that amongst persons with disabilities, accessibility requirements would be different for different disabilities from ambulant disabled (people with upper limb impairments, crutch users, rollators) to non-ambulatory persons (wheelchairs users) to persons with visual (people with blindness, partial sight / low vision) and hearing impairments (deaf / hard of hearing).

This manual gives the accessibility standards of some key built-environment features as per the Harmonized Guidelines and is meant to serve as a ready reference for relevant stakeholders like planners, designers, builders and contractors, civic agencies, development authorities etc. to pave the way for inclusive and accessible built environment in all public buildings. However, please do refer to the complete guidelines before considering its practical implementation.

Shishu Sarothi
Disability Law Unit – NE

November, 2020

Contents

[1] All Section numbers in this manual are given as per the Harmonized Guidelines

Overview of Accessibility Standards for Key Built Environment features as per the Harmonized Guidelines:

Passenger alighting and drop off points - Section 5.4

- Provide an access aisle of at least 1500mm wide by 6000mm long adjacent and parallel to the vehicle pull-up space
- The accessible aisle must be at the same level as the vehicle
- Have a kerb ramp, if there are kerbs between the access aisle and the vehicle pull-up space
- Wherever possible, be sheltered and have identification signage (symbol of accessibility) for alighting area
- Tactile floor guidance to be provided from the building drop off area leading up to entrance of the building

Access to building - Section 5.4

- An access route should connect all major entrances & exits of the building from the alighting and boarding point of vehicles / car park lots for Persons with Disabilities
- In multi-stories buildings, the accessible entrance must have an accessible route leading to the elevators
- The accessible entrance, if different from the main entrance, should be located adjacent to the main entrance and not at the rear of the building. It should be clearly signed and easy to locate
- Symbol should be displayed at all other non-accessible entrances to direct Persons with Disabilities to the accessible entrance

- A clear, firm and level landing of at least 1800mm x 1800mm should be provided on either side of the entrance door
- The clear width of the accessible entrance door should not be less than 900mm, preferable 1m and the width of the corridors or passageways leading to and from such access door should not be less than 1200mm
- Internal floor surfaces should be anti-skid / non-slip and of materials that do not impede the movement of wheelchairs/other mobility aids. If mat is provided it should be flushed with the floor finish
- Persons with visual impairments find it easier to locate doors if there is a texture difference in the floor around the doorway from the rest of the flooring
- In addition to tactile pavers leading to the main entrances, beepers may be put at all main entrances to enable people with visual impairments to locate them
- A tactile layout plan of the building along with Braille and audio systems should be provided at the entrance for people with visual impairments

Internal Corridors and Accessible Routes - Section 5.5

Width

- The minimum clear with of an accessible route should be 1500mm to allow both a wheelchair and a walking person to pass except when additional manoeuvring space is required at doorways
- Where space is required for two wheelchairs to pass, the minimum clear width should be 1800mm

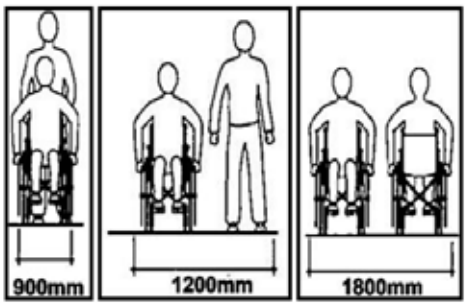

Minimum width of a clear walkway

Resting benches / seats

- In long paths of travel, resting areas should be provided at frequent intervals not exceeding 30 meters

Protruding objects

- Obstacles, projections or other protrusions should be avoided in pedestrian areas such as walkways, halls, corridors, passageways or aisles

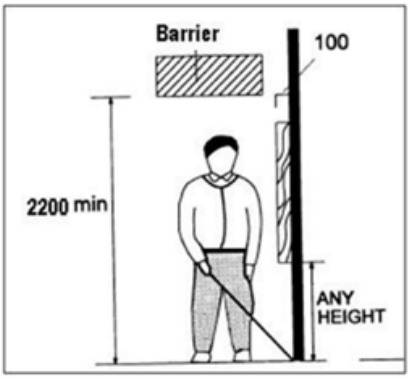

Protruding obstacles placed in a niche

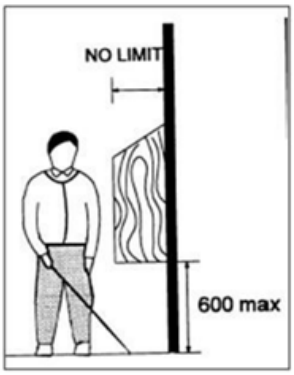

Clearance from protruding obstacles

Floor surfaces in corridors

- Floor surface should be stable, firm, level and slip-resistant and preferably matt finish and should not have any projections, drops, or unexpected variation in level. Also:
- Avoid carpeting. If carpet is used, it should be fixed firmly with a pile not higher than 12mm
- Complex patterns should be avoided
- Floor patterns that could be mistaken for steps, for example stripes, should not be used for floors in corridors
- Floors should be levelled. If this is unavoidable, the slope of floors should be no greater than 1:20. If greater, floor should be designed as ramp

Lighting in corridors

- Lighting in a corridor should be even, diffused and without glare, reflections or shadows
- Minimum illumination level in the corridor should be 150 lux

Doors leading into corridors

- Doors should not open outwards from rooms directly into a frequently used corridor, with the exception of doors to accessible toilets and service ducts
- Where a door opens into an infrequently used corridor such as emergency exit, the corridor width should allow a clear space of 900mm within the corridor when the door is open. Such doors should be located clear of any sloping floor surfaces in the corridor
- Any door that opens towards a frequently used corridor should be located in a recess at least as deep as the width of the door leaf
- The leading edge of any door that is likely to be held open should "contrast visually" with the remaining surfaces of the door and its surroundings to help identification by visually impaired people

Tactile guidance path along the internal corridors and accessible routes

- Along the accessible corridor and route connecting the entire building, a tactile floor guidance path for independent movement of persons with visual impairments should be provided. Tactile guidance path have to be laid out in the entire building premises connecting all the public utilities and locations and building entrance and exits

Gratings

- Gratings should preferably be covered
- Grating located along the exterior circulation should be perpendicular to route of travel

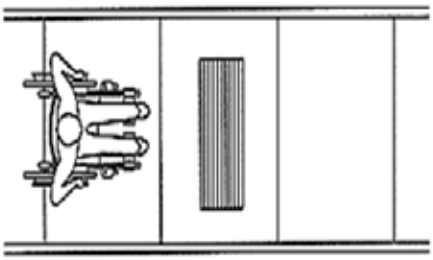

Gratings should be perpendicular to route of travel

Doors - Section 5.7

- Doorways should be levelled.
- Minimum clear openings of doorways should be not less than 900mm
- Where revolving doors or turnstiles are installed, it should be supplemented with an auxiliary side-hung (swing type) door
- Door handle to be between 850mm - 1100mm from finished floor level – not to require fine finger control
- There should be no threshold. If unavoidable, its height should not exceed 12mm and beveled if > 5mm to facilitate passage of wheelchairs
- Vision panel for two-way swing doors with visibility between 800mm-1500mm height
- Glass doors to have permanent manifestations contrasting visually with background
- Bathroom (toilets / washroom) doors should swing out/ should be two way opening type. In case there is not much space available, consideration should be given to the use of sliding or folding doors to allow minimum space for manoeuvring a wheelchair

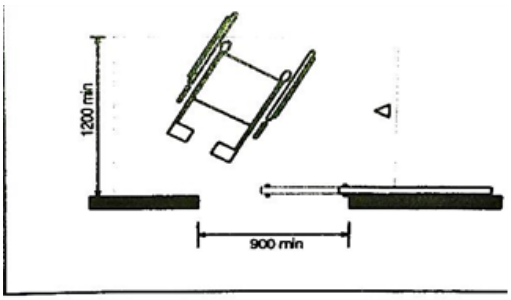

Sliding door

- Automatic doors should have a push button system to open them
- All external doors should have warning blocks installed 300mm before entrances
- Glass doors - The presence of a glass door should be made apparent, with permanent manifestation at two levels, within 800mm to 1000mm from the floor and within 1400mm to 1600mm from the floor
- Double-leaf doors - In case the door has two independently operated door leaves, at least one active leaf should have minimum width of 900mm
- Two doors in series - the minimum space between two hinged or pivoted doors in series should be 1200mm plus the width of the door swinging into that space

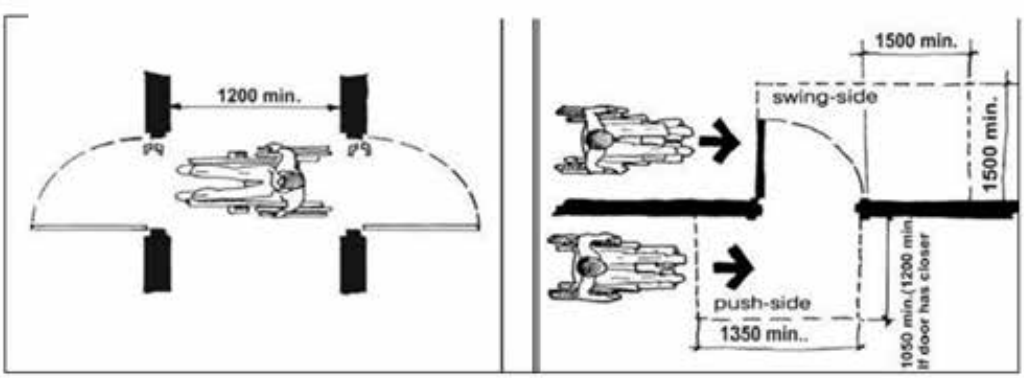

Manoeuvring space needed for approach doors

Door hardware

Operable devices such as handles, pulls, latches and locks should:

- Be operable by one hand
- Not require fine finger control, tight grasping, pinching or twisting to operate
- Be mounted at a height of 850mm to 1100mm from the floor
- For easy identification by persons with visual impairment, all door furniture should contrast visually with the surface of the door

- The location and design of latch and push/pull handles should be consistent throughout a building

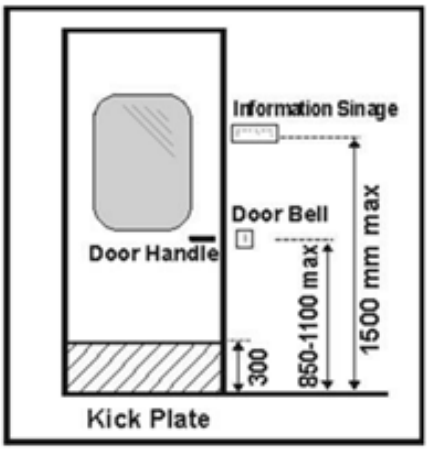

Door hardware location

Door handles

The following characteristics are recommended:

- Push – pull mechanisms that require no grasping
- Lever handles to be preferred on latched doors
- It is safer to use D shaped handles as they reduce the risk of catching on clothing, or injuring from the exposed lever end
- Doorknob is not recommended, as it does not provide adequate grip for persons with impaired hand functions

Door Pull

Lever Handles

Knob handles not preferred

(Preferred door handles)

Handrails and Grab bars - Section 5.9

Handrail is a rail used in circulation areas such as corridors, passageways, ramps and stairways to assist in continuous movement. It should:

- Be slip-resistant with round ends
- Have a circular section of 38mm - 45mm in diameter
- Have a minimum clear space of 50mm from the walls
- Be free of any sharp or abrasive elements
- Have continuous gripping surfaces, without interruptions or obstructions that can break a hand hold
- Extend 300mm beyond the stairs / ramps

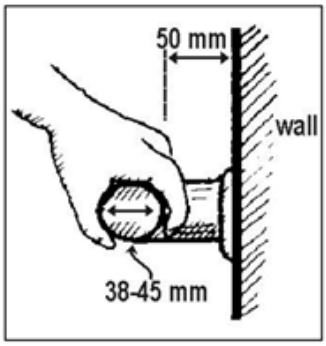

Grab bar details

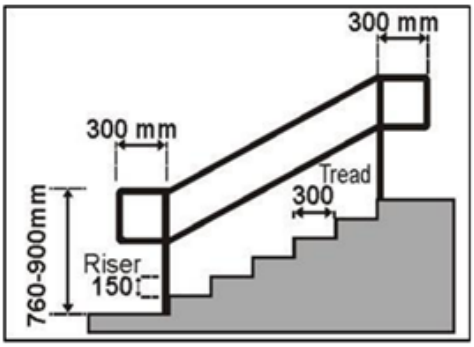

Handrails for steps

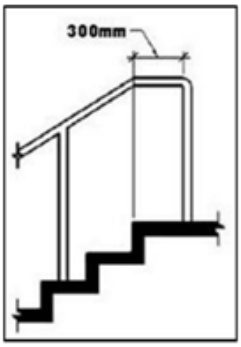

Handrails for extension

Grab Bars

Grab bar is a bar used to give a steadying or stabilizing assistance to a person engaged in a particular function.

Grab bars/ rails should be manufactured from a material which contrasts with the wall finish (or use dark tiles behind light coloured rails), be not too warm/cold to the touch and provide good grip. Grab rails should be properly fixed, since considerable pressure will be placed on the rail during manoeuvring.

Grab bars should:

- Be slip-resistant with round ends
- Preferably have knurled surfaces
- Have a circular section of 38mm - 45mm in diameter
- Be free of any sharp or abrasive elements
- Have a minimum clear space of 50mm from the wall
- Be installed at a height of 760mm to 900mm
- Be able to bear a weight of 250kg

In rural areas, indigenous materials such as bamboo / wood / others can be used for making grab bars in toilets.

Controls and operating mechanisms - Section 5.10

Clear Floor Space

- A clear and level floor space of at least 900mm x 1200mm should be provided at controls and operating mechanisms designated for use by Persons with Disabilities
- Where a forward approach is used, a clear knee space of at least 900mm wide, 480mm deep and 650mm high should be provided, which may overlap the clear floor space by a maximum of 480mm

Electrical points, Controls and Outlets

The operable part of controls such as vending machines, electrical switches, wall sockets and intercom buttons should be:

- Located adjacent to the clear floor space

- Located at a height of between 600mm to 1100mm from the floor with the exception of vending machines where the upper limit is relaxable by a maximum of 100mm
- To cater for wheelchair users, controls should be placed not less than 400mm from room corners
- Operable by one hand
- Of a type that does not require tight grasping, pinching or twisting of the wrist
- Operable with a force less than 22N

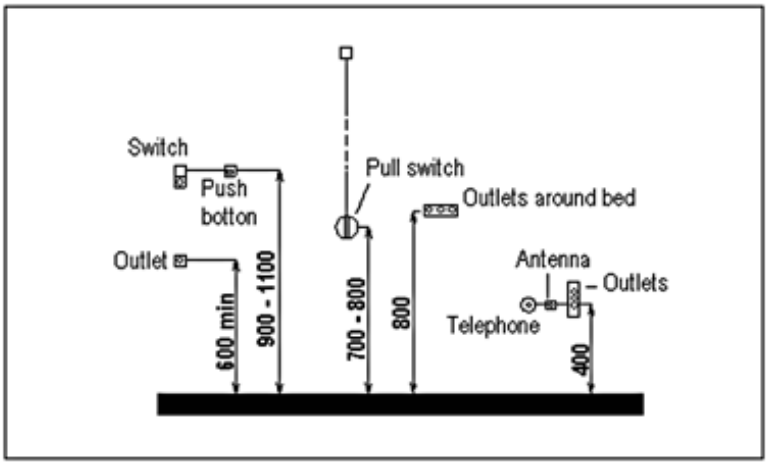

Location of electrical sockets, control, etc

Faucets / taps

Faucets and other controls designated for use by Persons with Disabilities should be hand-operated or electronically controlled.

Hand-operated controls should:

- Be operable by one hand
- Require no tight grasping, pinching or twisting of the wrist
- Require a force less than 22N to activate
- Have handles of lever type (not self-closing) operable with a closed fist

Recommended lever-type / long handles

Drinking Water - Section 5.12

Drinking water fountain/unit should have:

- Clear floor space of 900mm x 1200mm
- Clear knee space between bottom of apron and floor/ground of at least 750mm wide, 200mm deep, 680mm high
- Wall mounted drinking water provision should preferably be in an alcove, as it does not create a hazard for persons with visual impairments
- Provision of 2 drinking water facilities at different heights preferable for standing adults, people in wheelchairs and children
- Lever type tap and comply with requirements for faucets / taps under Controls & Operating Mechanisms

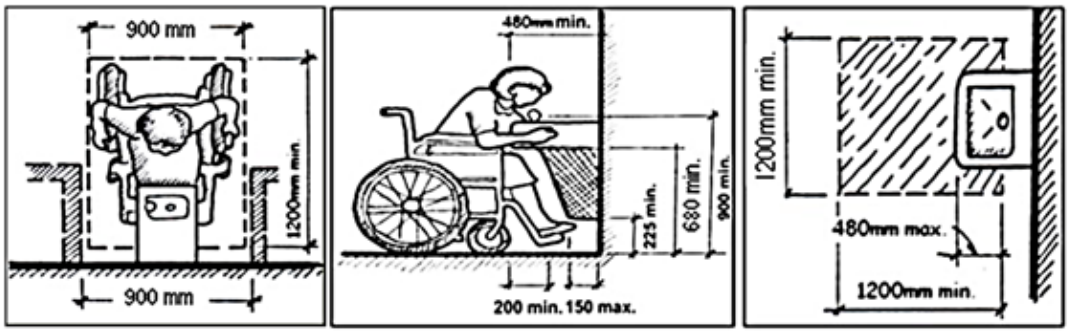

Front approach | Accessible drinking water unit | Space required for front approach

Drinking water fountain

Signages - Section 6

People need clear information about the purpose and layout of spaces to maintain a sense of direction and independent use of a building. Information may take the form of visual information (e.g. signs, notice boards), audible information (e.g. public address and security systems, induction loops, telephones, and infrared devices), or tactile information (e.g. signs with embossed lettering or Braille).

The effectiveness of information on the use of a building is determined by:

- The Location, accessibility, layout and height of signs

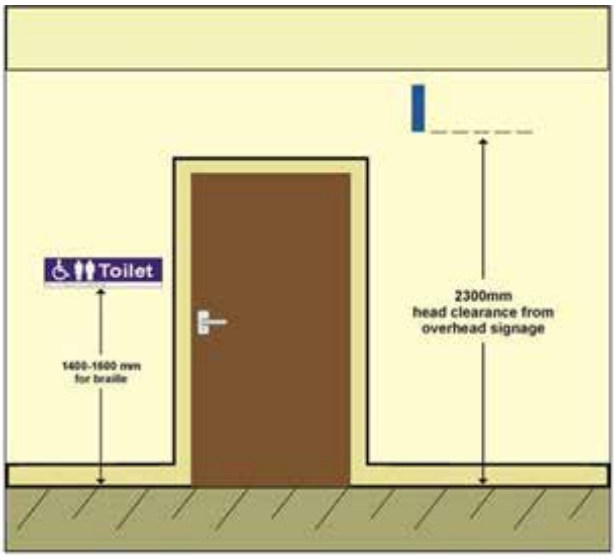

Height and placement of signages

Viewing Distance	Size of signage
Up to 7 meters	60 mm x 60 mm
7 meters – 8 meters	100mm x 100 mm
Exceeding 8 meters	200 mm x 200 mm to 450 mm x 450 mm

Size of Signage

- Size of lettering, symbols and reading distances

Viewing Distance	Height of letters
2 - 3 meters	15 mm
6 meters	20 mm
8 meters	25 mm
12 meters	40 mm
15 meters	50 mm
25 meters	80 mm
35 meters	100 mm
40 meters	130 mm
50 meters	150 mm

Size of Letters in Signage

- Use of tactile letters / symbols
- Visual contrast and lighting
- Finished surfaces of materials used for signs and symbols should be non-reflective
- Simultaneous use of audible cues

Signs to facilities for Persons with Disabilities should incorporate the International Symbol for Accessibility.

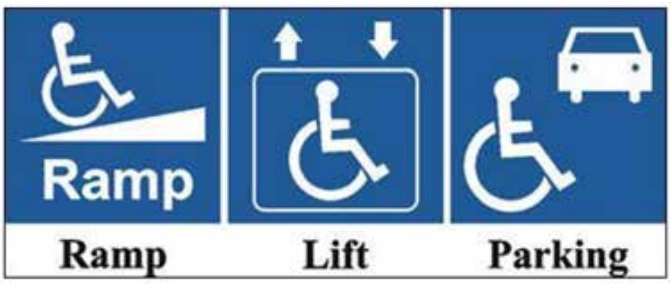

Signage for accessible areas

Types of Signages

According to the purposes it serves, signage can be of following types:

a) Directional - For Way-finding - with arrows along travel routes

b) Information - Provide detailed info, including maps & directories with “You are Here” labels

c) Identification - To signify arrival. Also called Destination Sign - usually identify entrances, street addresses, buildings, rooms, facilities, places and spaces

d) Instructive - To give instruction for operating a device, way finding, etc

e) Health & Safety - (Provide lifesaving directives and/or mandatory rules to be followed

Directional signage for ramp

Directional signage for rooms

Information signage

Destination signage for rooms

Instructive signs

Mandatory Health & Safety signage

Kerb Ramps - Section 7.1

A kerb ramp is a short ramp cutting through a curb or built up to it or a Kerb is a drop, with walk way, at a gradient no greater than 1:10 on both sides of necessary and convenient crossing points.

Kerb ramps should:

- Be provided where the vertical rise is less than 150mm
- Have a slip-resistant surface
- Do not require handrails
- Not project into the road surface
- Be located or protected to prevent obstruction by parked vehicles
- Be free from any obstruction such as signposts, traffic lights, etc

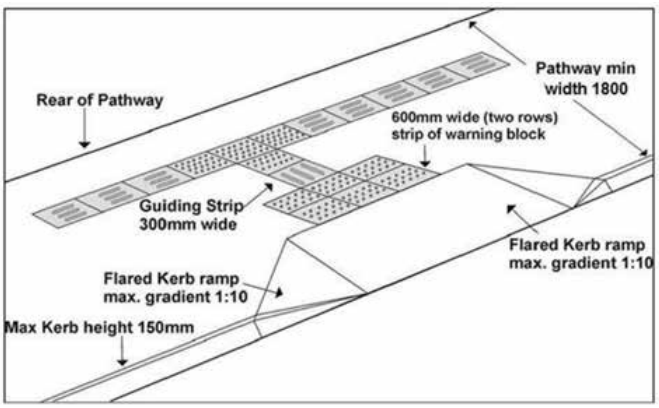

Kerb ramp detail

Ramps - Section 7.2

General

- Ramps allow persons in wheelchair to move from one level to another. However, many ambulant Persons with Disabilities negotiate steps more easily and safely. Hence, it is preferable to provide accessibility by both steps and ramps
- Where there is a large change in elevation that requires multiple ramps and landing combination, other solutions such as elevators should be considered

Width - The minimum clear width of a ramp should be 1200mm.

Gradient - the gradient should be constant between landings. The recommended gradients for ramps are given in the Table below:

Level difference	Minimum gradient of Ramp	Ramp Width	Handrail on both sides	Comments
≥ 150 mm ≤ 300 mm	1:12	1200 mm	√	
≥ 300 mm ≤ 750 mm	1:12	1500 mm	√	Landings every 5 meters of ramp run.
≥ 750 mm ≤ 3000mm	1:15	1800 mm	√	Landings every 9 meters of ramp run.
≥ 3000 mm	1:20	1800 mm	√	Landings every 9 meters of ramp run.

Surface

- Ramps and landing surfaces should be slip resistant
- Outdoor ramps and their surface should be designed to prevent water from accumulating on the walking surfaces

Landings

- Ramps should have a level landing at the top and bottom of each run and also where the run changes direction
- Landings should be provided at regular intervals of not more than 9000mm of every horizontal run and should have a level platform of not less than 1500mm

Handrails

A ramp run with a vertical rise greater than 150mm should have handrails that are:

- On both the sides
- Placed at a height of between 760mm and 900mm above the floor level
- Continuous on both sides & even at landings
- Extended horizontally for a distance of not less than 300mm beyond the top and bottom of the ramp
- Not projecting into another path of travel

Stairs - Section 7.3

- Stairs should not be the only means of moving between floors. They should be supplemented by lifts and /or ramps
- Treads should be 300mm deep and risers not higher than 150mm
- There should be no more than 12 risers in one flight run
- The stairs landing should be minimally 1200mm deep
- The stairs should have minimum 1500mm clear width
- Steps should be of a consistent height and depth throughout the staircase
- Projecting nosing and open stairs should not be provided to minimize the risk of stumbling. Also, spiral stairs should be avoided
- Handrail for stairs should comply with standard recommendations for handrails and should extend not less than 300mm beyond the top and bottom step
- Warning blocks should be installed 300mm before the beginning and 300mm after the end of each flight of steps

Warning blocks at landings

Placement of warning blocks for steps

- There should be colour contrast between landings, and the steps
- Step edges must contrast in colour to the risers and the treads. Contrast colour bands 50mm wide should be provided on the edge of the treads

Lifts - Section 7.4

- Minimum internal dimensions of lift should be 1500mm wide x 1500mm deep
- Lift Door should have a clear opening of minimum 900mm
- No gap or level differences between the lift & floor
- Door Closing time for an automatic door should be more than 5 seconds
- Call buttons should be installed at a height between 800mm and 1000mm and be supplemented in Braille/ raised letters and in sharp contrast from the background to aid people with visual impairments
- Grab bars / handrails to be fixed on both sides and the rear at 900mm height from floor level
- Voice announcement system along with a visual display to indicate the floor level and also the information that the door of the cage is open or closed for entrance or exit

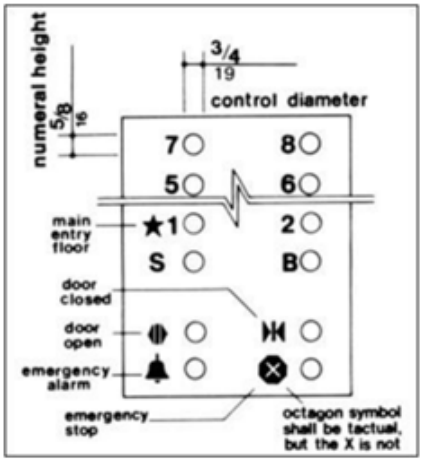

Layout of lift control panel

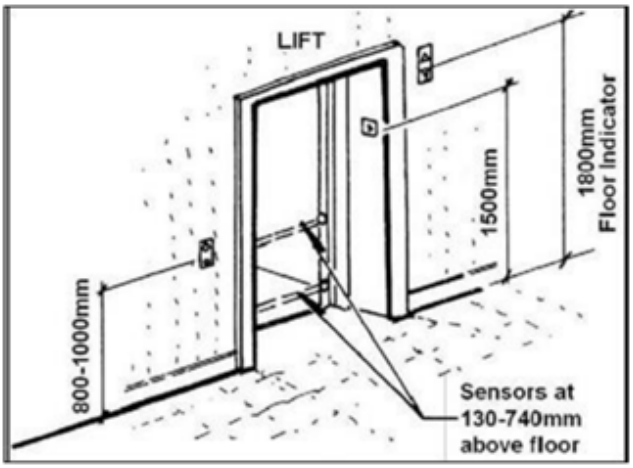

Specifications of lift controls

Wheelchair Stair-lift and Platform Lift - Section 7.5

Where it is impracticable to provide a lift or a ramp, a wheelchair stair-lift or platform lift should be considered as a reasonable alternative for vertical circulation within the building.

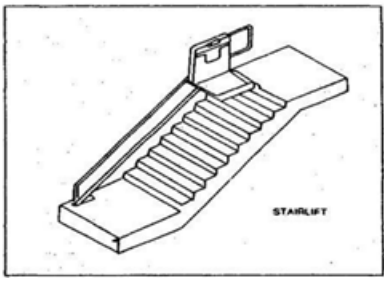

Stair lift

Vertical Movement Platform Lifts

- For maximum level changes of 2500mm, vertical movement platform lifts may be installed
- For level changes of more than 1200mm, the lift should be placed in a closed structure with doors at different accessible levels
- Minimum size should be 1200mm X 1000mm

Stair lift

Platform lift

Accessible Toilets - Section 8

Unisex accessible toilet allows Persons with Disabilities to be assisted by carers of the same or opposite gender. In all public buildings, one unisex accessible toilet should be provided in each toilet block on each floor. Apart from this all toilet blocks must have one cubicle suitable for use by persons with ambulatory disabilities.

Accessible toilets should have the international symbol of accessibility displayed outside for wheelchair access.

The unisex toilet should have:

- Minimum internal dimensions of 2200mm X 2000mm

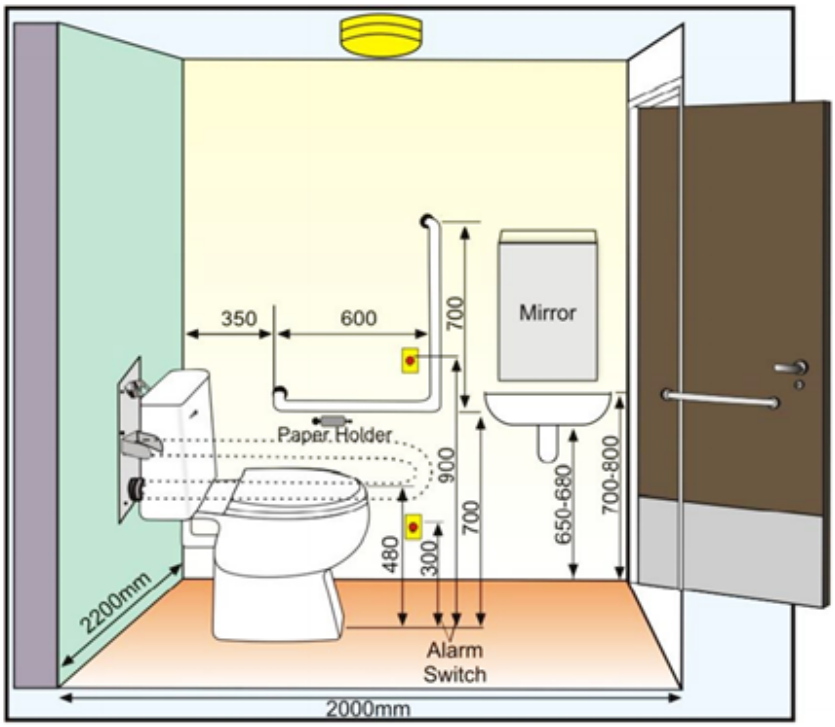

Layout plan of unisex accessible toilet

- The layout of the fixtures in the toilet should be such that there is a clear manoeuvring space of 1800mm x 1800mm in front of the water closet and wash basin in the accessible toilet unit

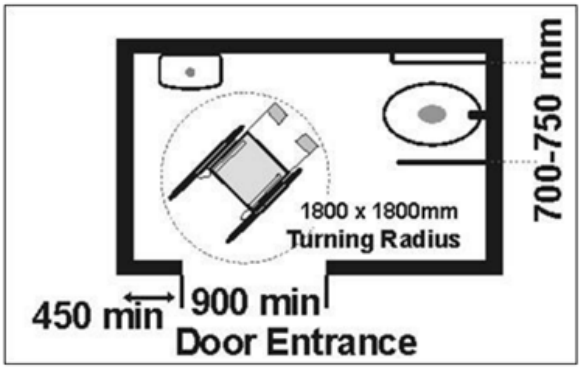

Wheelchair manoeuvring space in toilet

- All fixtures and utilities should provide a clear space of 900mm x 1200mm for wheelchair users to access them
- Have clear space of not less than 900mm wide next to the water closet

Toilet doors

- Should be outward opening or two-way opening or a sliding type door and should have a clear opening width of at least 900mm
- Be provided with a horizontal pull-bar, at least 600mm long, on the inside of the door, located so that it is 130mm from the hinged side of the door and at a height of 1000mm
- Be capable of being locked from the inside by a device that is operable by one hand, activated by a force not more than 22N and which does not require fine finger control, tight grasping, pinching or twisting of the wrist

Water Closets

- Be located between 460mm to 480mm from the centreline of the water closet to the adjacent wall
- It should have a clear dimension of 750mm from the front edge of the water closet to the rear wall to facilitate side transfer

- The top of the water closet seat should be 450mm to 480mm from the floor
- There should be an adequate clear floor space of at least 1350mm depth and 900mm width, both in front and on the transfer side, adjacent to the water closet
- The flush control should either be lever type or automatic, and located on the transfer side of the water closet. The flush control should not be located more than 1000mm from the floor
- Where more than one accessible toilet is provided, a left and right hand transfer option should be made available

Grab Bars

- Water closets should be provided with grab bars mounted at a height between 200mm and 250mm from the water closet seat
- One L-shape grab bar: 600mm long horizontal and 700mm long vertical should be mounted on the side wall closest to the water closet
- A hinged type horizontal grab bar should be installed adjacent to the water closet; at a distance of 320mm from the centre-line of the WC, between heights of 200mm - 250mm from the top of the water closet seat and extending 100mm to 150mm beyond the front of the water closet
- An emergency alarm-cum-call switch should be provided within easy reach on the wall near water closet at two levels: at 300mm and 900mm from the floor level to allow user to call for help in case of an emergency

Washroom Accessories

- A mirror installed in a way to have the bottom edge at a height of not more than 1000mm from the floor and mirror should be tilted at an angle of 30° for better visibility of wheelchair user
- Towel, soap dispensers, hand dryer and waste bin should be positioned such that the operable parts and controls are between 800mm and 1000mm from the floor

- Have the toilet roll dispenser and hand water faucet mounted below the grab bars and at not more than 300mm from the front edge of the seat and at a height between 50mm and 200mm from the top of the water closet seat
- Be equipped with a cloth hook mounted on a side wall not more than 1200mm from the floor and projecting not more than 40mm from the wall

Emergency Evacuation - Section 9

Alarm Panels

- Placement (accessibility) and visibility of alerting devices is very important
- Fire alarm boxes, emergency call buttons and lighted panels should be installed between heights of 800mm and 1000mm from the finished floor surface
- These should be adequately contrasted in colour and tone from the background wall and should be labelled with raised letters and also in Braille

Alerting Systems

- Audible alarms with “Voice Instructions” should be installed that can help guide people with visual impairment to the nearest emergency exit. As an alternative to the pre-recorded messages, these alarms may be connected to central control room for on-the-spot broadcasts
- Non-auditory alarms (visual or sensory) to alert persons with hearing impairments should be installed at visible locations in all areas that the building users may visit (including toilet areas, storerooms etc.). Non-auditory alarms include flashing beacons

Evacuation Plans

- Evacuation plans that clearly indicate the designated emergency evacuation routes as well as location of refuge areas should be displayed at all public areas of the building

- These should contrast strongly against the background and should incorporate raised letters, tactile routes and Braille for benefit of persons with visual impairments

Emergency Evacuation Routes

- Designating evacuation routes shall be at least 1500mm wide and it should be free of any steps or sudden changes in level and should be kept free from obstacles such as bins and flower pots etc
- An exit stairway to be considered part of an accessible means of egress shall have a minimum clear width of 1500mm between handrails and shall either incorporate an area of refuge within an enlarged floor-level landing or a horizontal exit
- Orientation and direction signs should be installed frequently along the evacuation route and these should preferably be internally illuminated
- Exit signage should also be available in tactile format in the evacuation route
- Along the emergency route, tactile floor guidance for persons with visual impairments should be provided

Refuge Areas

- A refuge area is a place of relative safety where persons who may not be able to negotiate inaccessible egress routes may await rescue assistance
- Where a required exit from an occupiable level above or below a level of accessible exit discharge is not accessible, refuge areas shall be provided on each such level (in a number equal to that of inaccessible required exits)
- Every required area of refuge is to be accessible from the space it serves by an accessible egress route
- Every area of refuge shall have direct access to an exit stairway
- Each area of refuge must be separated from the remainder of the story by a smoke barrier having minimally one hour fire resistance rating. Each area of refuge is to be designed to minimize the intrusion of smoke

- The size of the refuge to provide at least two accessible areas each being not less 750mm by 1200mm. The area of rescue assistance shall not encroach on any required exit width. The total number of such areas per story shall be not less than one for every 200 persons of calculated occupant load served by the area of rescue assistance

- All stairs next to the refuge should have a clear width of 1500mm between the handrails

- A method of two-way communication, with both visible and audible signals, shall be provided between each area of rescue assistance and the primary entry

Refuge area

Signage

- Each area of rescue assistance shall be identified by a sign “REFUGE AREA” displaying the international symbol of accessibility

- It should be illuminated when exit sign illumination is required

- Signage should also be installed at all inaccessible exits and where otherwise necessary to clearly indicate the direction to areas of rescue assistance

- In each area of rescue assistance, instructions on the use of the area under emergency conditions shall be posted adjoining the two-way communication

Parking - Section 10.1

- Accessible car parking lot should have min. dimensions: 5000mm x 3600mm
- Location: nearest to the accessible entrance and / or lift lobby within 30 meters

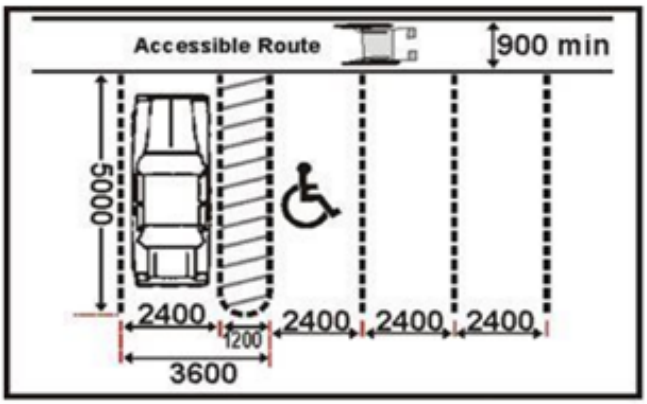

Accessible Parking

- Signage: International Symbol of Accessibility should be clearly marked on the accessible parking lot for drivers/riders with disabilities only
- Two accessible parking lots should be provided for every 25 car parking spaces

Reception / Information Counters - Section 10.4.4

- Counters should be easily indefinable and well illuminated
- There should be clear floor space of at least 900mm x 1200mm in front of the counters
- Counters should be at two heights and a part of reception / enquiry / cash counters should be lowered to a height between 750mm to 800mm. It should have a clear knee space of 750mm high by 900mm wide by 480mm deep for the use by wheelchair users
- There should be tactile pictographic maps of the building near the counter

Counter Tops

Notes

Notes

Notes

SHISHU SAROTHI

Disability Law Unit – North East
Shishu Sarothi, Center for Rehabilitation
& Training for Multiple Disability

Off Ramakrishna Mission Road
Birubari, Guwahati - 781016

+91-8822867130

dlu.northeast.ss@gmail.com
shishusarothi@gmail.com

www.shishusarothi.org

Supported by

অসম চৰকাৰ

GOVERNMENT OF ASSAM

Social Welfare Department